DESIGN AND CONSTRUCTION OF PHOTOVOLTAIC SYSTEM

BY

ALOYE BENJAMIN AYOMIDE

EEE/13/1099

SUBMITTED TO

DEPARTMENT OF ELECTRICAL AND ELECTRONICS ENGINEERING,

FACULTY OF ENGINEERING,

FEDERAL UNIVERSITY OYE EKITI.

IN PARTIAL FULFILMENT OF THE REQUIREMENTS FOR THE AWARD O[illegible]

BACHELOR OF ENGINEERING (B.Eng.) DEGREE IN ELECTRICAL ELEC[illegible]

ENGINEERING

FE[illegible]

DEDICATION

I dedicate this report to God almighty the maker of heaven and earth who had granted me the enabling grace for the successful completion of my project and also to my families, lecturers, staffs, fellow graduating students and logistic course mates whose love, moral support, valid and quick information helped me make it through the rough times.

DECLARATION OF ORIGINALITY

This project is all my own work and has not been copied in part or in whole from any other source except where duly acknowledged. As such, all use of previously published work (from books, journals, magazines, internet, etc) has been acknowledged within the main report to an entry in the References list.

I agree that an electronic copy or hardcopy of this report may be stored and used for the purposes of plagiarism prevention and detection.

I understand that cheating and plagiarism constitute a breach of University Regulations and will be dealt with accordingly.

The copyright of this project and report belongs to Federal University, Oye-Ekiti.

Signed: Date:

Office Stamp

CERTIFICATION

We hereby certify that this project has been executed by **ALOYE Benjamin Ayomide** and submitted to the Department of Electrical Electronics Engineering, Federal University Oye-Ekiti in partial fulfilment for the award of Bachelor of Engineering (B.Eng.) degree in Electrical Electronics Engineering.

Project Supervisor | Signature and Date

Engr. S. O. Sanni

Head of Department (H.O.D) | Signature and Date

Dr. Engr. J. Y. Oricha

ABSTRACT

Design and construction of stand-alone PV system was carried out in this work. The target of the work is to design and construct a charge control unit and a power inverter system, and to design a battery storage system to power the load. The circuitries are designed and simulated using Proteus professional software. A prototype of the system is assembled on the breadboard for testing and analysis in the laboratory. The testing of the breadboard layout yielded a sinewave output when analyzed using the oscilloscope. The prototype is transferred to a vero board and soldered. The constructed units are housed on a flat board. A modified sine wave was observed at the output stage of the inverter. It was observed that the discharge duration of the battery bank decreases as the load on the system increases.

Table of Contents

LIST OF FIGURES

LIST OF TABLES

ACKNOWLEDGEMENT

The satisfaction that accompanies the successful completion of this project would be incomplete without mentioning the names of those who made it possible. It is evident that without the constant guidance and encouragement received from these great personalities, all efforts would have gone in vain. I convey thanks to my supervisor Engr. Shereefdeen O. Sanni, for providing me with the required encouragement, sacrifice, moral support and constant support which was of a great help to complete this scheme of my final phase of developing a project in my final year successfully.

My appreciation goes to the Dean of Engineering in the person of Prof. Alabadan and the Head of Department of Electrical and Electronics Engineering - Dr. J. Y. Oricha for their mentorship and great lessons often time. I extend my foremost appreciation to all the teaching and non-teaching staffs in the department of Electrical and Electronics Engineering for their humanitarian service and relentless participation in making us a well baked engineering graduates.

My profound gratitude goes to my parents Mr. and Mrs. Aloye and also to my siblings, my friends and well-wishers. God bless you all.

CHAPTER ONE

1.0 INTRODUCTION

In this trendy society, electricity has great management over the foremost daily activities, this is evident in domestic and industrial utilization of electric power for operations. Electricity can be generated bulkily and supplied to consumers through various means such as the use of water, wind or steam energy to drive the turbine as well as more recently the use of gas. Solar energy and nuclear energy are also rich sources of electricity (Olusegun, Segun, & Taiwo, 2014).

Photovoltaic (PV) offers consumers the flexibility to generate electricity through a very clean, quiet, efficient and reliable means. PV system is made up of photovoltaic cells. The word "photovoltaic" is derived from 'photo" meaning light and "voltaic" meaning generating electricity. Hence, photovoltaic is "generating electricity from sunlight" (Bharathkumar & Byregowda, 2014).

A solar cell is a semi-conductor device which converts photons from sunlight into electricity. When sunlight hits the surface of the solar cell, it produces both voltage and current to generate electric power. This process requires firstly, a material in which the absorption of light raises an electron to a higher energy state, and secondly, the movement of this higher energy electron from the solar cell into an external circuit. Many of materials and processes can be used for photovoltaic energy conversion, but in general practice, nearly all photovoltaic conversion modules use semiconductor materials in form of a p-n junction (Mohammad, Vahid, & Mohsen, 2015).

This chapter deals with the modeling of PV cell. It gives a basic idea on PV cell, module, and array. It explains the theory of PV cell along with the modeling equation. It also considers the effect of partially shading condition, and effect of varying solar irradiation & temperature.

1.1 Background of the Project

Nigeria lies within a high sunshine belt and thus has enormous solar energy potentials. The mean annual average of total solar radiation varies from about 3.5 KWh/m^2 per day in the costal latitudes to about 7 KWh/m^2 per day along the semi-arid areas in the far North. On the average, the country receives 19.8MJ/m^2 per day. Average sunshine hours are estimated at 6 hrs per day (Kofa, 2012).

In Nigeria, there is inconsistent supply of electricity by the power supplying company to the consumers. Hence the use of additional electric power source such as Solar Photovoltaic systems. Photovoltaic (PV) energy generating systems (or PV systems) convert the sun's energy directly into electricity using state-of-the-art semiconductor materials. PV systems produce clean, reliable energy without consuming fossil fuels and are used in a wide variety of applications. Some are called a "stand-alone or off-grid" system, which means they are the sole source of power to a home, water pump or other load. Stand-alone systems can be designed to run with or without battery backup. Remote water pumps are often designed to run without battery backup, since water pumped out of the ground during daylight hours can be stored in a holding tank for use anytime. When the amount of energy generated by a grid connected PV system exceeds the customer's loads, excess energy is exported to the utility, turning the customer's electric meter backward. Conversely, the customer can draw needed power from the utility when energy from the PV system is insufficient to power the building's loads. Under this arrangement, the customer's monthly electric utility bill reflects only the net amount of energy received from the electric utility.

Aliyu, (2012) stated that given an average solar radiation level of about 5.5KWh/m^2 per day and the prevailing efficiencies of commercial solar-electric generators, then if solar collectors or modules were used to cover 1% of Nigeria's land area of 923,773km^2, it is possible to generate 1850x10^{3}GWh of solar electricity per year, which is over one hundred times the current grid electricity consumption level in the country.

1.2 Statement of the Problem

The project aims to design and construct a system that incorporates two sources for the supply of electricity, hence the title "photovoltaic system". The design is one that utilizes supply from the PV array and also compensates with the local electricity utility in case of low generation of the PV array due to unfavorable weather or outage due to maintenance.

The specific problem sought to be addressed of this study are:

1. How to minimize time and ensure safety.
2. How to minimize power consumption using alternative source.
3. How to generate clean electricity from solar energy.

1.3 Motivation

To compensate teaching methods in class, and to create an avenue to familiarize students with the components and operation of a PV system in the laboratory.

1.4 Significance of the Study

Backup battery storage which enables optimum availability of the system. The design conforms to the existing designs and standards of household PV systems. The project provides in-depth knowledge of the PV system with an embedded charging system and a utility inverter that converts the dc power from the PV array to ac power for ac load.

1.5 Aim and Objectives of the Study

The aim of the project is to design and construct a stand-alone Photovoltaic system. The following are the specific objectives of the project:

- To design and construct a charge control system for the appropriate charging of the battery bank.
- To design and construct two-source modified sine wave power inverter.
- To design the battery storage system.
- To assemble and couple the constructed units together.
- To test the design till desired result is achieved.

1.6 Scope of Project

The photovoltaic system design has been split up into four chapters consisting of Literature review, System Design, Results and Recommendations.

- Chapter 2 details any relevant theory which is crucial in further understanding of the design sections.
- Chapter 3 details the design and steps involved in the PV system.
- Chapter 4 presents the result and discuss the testing and performance of the PV system.
- Finally, Chapter 5 includes recommendations and conclusion for the design technique presented

The project report aims at providing an in-depth and accurate analysis and of PV system design and relevant theory. It is hoped that enough detail has been provided to allow a good understanding of the design.

CHAPTER TWO

2.0 LITERATURE REVIEW

Renewable energy systems (REN) are distinguished to various natural renewable energy resources (RER) such as sunlight, wind, rain, tides, and geothermal heat, which are naturally replenished. According to Greenpeace International, about 18% of global electricity generation comes from renewables in 2010. The 18% share of renewables in electricity generation is divided into 15% of global electricity coming from hydroelectricity and 3% from new renewables.

Solar cell modules are connected in arrays forming a solar park to either feed a single load or to be coupled to a network. Wind turbines generators, as well as PVs are connected in form wind farm feeding a single load or a network. Better reliability is achieved by the combination of both of solar park and wind farm. According to that, PV and wind turbine systems can be schemed as:

- Stand-alone systems, and
- Grid-connected.

The scope of this study covers stand-alone PV system. Energy schemes in stand-alone dependent on weather conditions, causing a lack in power continuity due to the intermittent nature of wind and sun. However, solar parks and wind farms generation systems are usually accompanied with storage system to coat any energy shortage.

The high cost of storage system provides an additional cost to the total generation schemes, and introduces a hindrance in the employment and exploitation of RENs applications. The optimal selection of the number of solar cell panels, the size of wind generator and the size of the storage units to be used for certain applications at a particular site is an important economical task for electrification of isolated loads. Isolated loads are various, they can be villages in rural areas, Sahara regions, small island archipelagos, remote areas in developing nations, mountainous locations, telecommunications, refrigeration, water pumping, and water heating, etc. Otherwise, the oversized system is economic waste and it unfavorably affect further utilization of solar and wind energy systems. Therefore, RENs sizing represents an important part of the generation system design. Relevant works that have been done on solar PV systems shall be reviewed in detail.

2.1 Review of Related Works

Nadesa H. (2017) analyzed the optimal tilt angle and other aspects of PV modules in various climates. However, an economic optimization design tool for optimal PV size based on technology information, current tariffs and policy has not yet been developed. Hernández et al. (1998) developed a methodology for optimal size of PV system for different building types. The adopted design criterion was to optimize the profitability and amortization of PV installation.

Bansal and Goel (2009) discussed the integration of 25 kWp PV system in an existing building of cafeteria on the campus of Indian Institute of Technology, Delhi by creating a solar roof covering an area of about 250 m^2. The system was found to be optimum if integrated with an angle of 15° tilt with relation to north–south axis, in Delhi's climatic conditions, therefore giving it higher efficiency.

El-Tamaly, and Adel A. Elbaset (2006) proposed a computer program to determine optimal design of PV system. The proposed computer program based on minimization of energy purchased from grid. A comparative study between three different configurations (stand-alone Photovoltaic Power System (PVPS) with Battery Storage (BS), PVPS interconnected with UG without BS and grid-connected PVPS accompanied with BS) has been carried out from economic and reliability points of view with the main goal of selecting suitable one, to be installed at Zâfarana site to feed the load requirement.

Ferna´ndez-Infantes et al. (2006) developed a specific computer application for automated calculation of all relevant parameters of the installation, physical, electrical, economical, as well as, ecological for designing a PV system installation that may be either used for internal electric consumption or for sale using the premium subsidy awarded by the Spanish Government. It was found that economic incentives, like subsidies for part of the investment, and the chance to sell all the electricity generated at six times its market price, are required to make a PV installation profitable.

Li et al. (2009) dealt with the sizing optimization problem of stand-alone PVPS using hybrid energy storage technology. The three hybrid power systems, i.e., PV/Battery system, PV/fuel cell (PV/FC) system, and PV/FC/Battery system, are optimized, analyzed and compared. The proposed PV/FC/Battery hybrid system was found to be the configuration with lower cost, higher efficiency, and less PV modules as compared with single storage system. Mellit et al. (2009) presented an overview of artificial intelligent techniques for sizing PV systems: stand-alone, grid-connected, PV-wind hybrid systems, etc. Their results show that the advantage of using an artificial intelligent-based sizing of PV systems providing good optimization, especially in isolated areas, where the weather data are not always available.

Ren et al. (2009) dealt with the problem of optimal size of grid-connected PV system for residential application and developed a simple linear programming model for optimal sizing of grid-connected PV system. The objective of the study is to minimize the annual energy cost of a given customer, including PV investment cost, maintenance cost, utility electricity cost, subtracting the revenue from selling the excess electricity. It would be seen that the adoption of PV system offers significant benefits to household (reduced energy bills) and to the society (reduced CO_2 emissions) as a whole.

Kornelakis and Marinakis (2010) proposed an approach to select the optimal PV installation using Particle Swarm Optimization. Kornelakis (2010) presented a multi-objective optimization algorithm based on PSO applied to the optimal design of grid-connected PV systems. The proposed methodology intends to suggest the optimal number of system devices and the optimal PV module installation details, such that the economic and environmental benefits achieved during the system's operational lifetime period are both maximized. Also, Al-Salaymeh et al. (2010) proposed a design of PV system to produce energy for basic domestic needs. The proposed design studied the feasibility of utilizing PV systems in a standard residential apartment in Amman city in Jordan to conduct energy and economic calculations. It was found that the calculated payback period high in a stand-alone system, to decrease payback period a grid-connected PV system was suggested. The output results of this study show that installation of PV system in a residential flat in Jordan may not be economically rewarding owing to the high cost of PV system compared to the cost of grid electricity.

Hosseini et al. (2009) presented a control system that combines grid-connected PV system and power quality enhancement with two system configurations. In the first configuration, the PV panel is connected directly to active filter and the output voltage of PV panel is equal to the DC bus voltage in MPP. In the second configuration, due to low voltage of PV panel, it is connected to active filter through a DC–DC boost converter. The system can not only realize PV generation, but also suppress current harmonics and compensate reactive Power. Simulation results with PSCAD/EMTDC software show that the PV system can be used to provide the function of power quality managements and also to transfer its power to the ac local loads.

Luo et al. (2011) developed a building integrated photovoltaic (BIPV) central inverter control strategy combined with reactive power compensation, harmonic suppression and grid-connected power generation. Recursive integral PI had been adopted to obtain precise current of a BIPV inverter. The improved ip-iq algorithm could detect the harmonics and reactive power rapidly. The introduction of network voltage forward feed control can effectively restrain system disturbance. Also, it enables BIPV inverter not only to provide active energy, but also to suppress the harmonics and reactive power current brought in by load. Prototype development based on simulation results and photovoltaic experimental platform had been set up and united control research had been done.

Wang et al. (2011) proposed a grid-interfacing system topologies with enhanced voltage quality for micro grid applications. Two three-phase four-leg inverters, together with DC micro sources and nonlinear loads, are employed to construct a general series–parallel grid-interfacing system. With the reconfigurable functionalities, the proposed systems have been compared with conventional series–parallel systems and shunt-connected systems, showing flexible applicability. The system also shows the possibility to achieve auxiliary functions such as voltage unbalance correction and harmonic current compensation. The proposed methods have been verified by experimental tests on a laboratory setup.

Muneer et al. (2011) proposed an optimization model to facilitate an optimal plan for investment in large-scale solar PV generation projects in Ontario, Canada. The optimal set of decisions includes the location, sizing, and time of investment that yields the highest profit. They considered various relevant issues associated with PV projects such as location-specific solar radiation levels, detailed investment costs representation, and an approximate representation of the transmission system.

Bojoi et al. (2011) proposed a control scheme for a single-phase H-bridge inverter with power quality features used in DG systems. The proposed scheme employed a current reference generator based on Sinusoidal Signal Integrator (SSI) and Instantaneous Reactive Power (IRP) theory together with a dedicated repetitive current controller. The idea is to integrate the DG unit functions with shunt active power filter capabilities. With this approach, the inverter controls the active power flow from the renewable energy source to the grid and also performs the nonlinear load current harmonic compensation by keeping the grid current almost sinusoidal. Experimental results have been obtained on a 4 kVA inverter prototype tested for different operating conditions. The experimental results have shown good transient and steady state performance in terms of grid current THD and transient response.

2.2 Types of PV systems

Photovoltaic power systems are generally classified according to their functional and operational Requirements, their component configurations, and how the equipment is connected to other power Sources and electrical loads. The principal classifications are;

- grid-connected systems
- stand-alone Systems and
- Hybrid systems.

2.2.1 Grid connected PV systems

A grid connected or utility-interactive photovoltaic system will be interacted with utility grid. The main advantage of this system is its contribution in the energy generation and as a result the power demand satisfaction, also it makes the power system more sustainable. Grid connected systems can be designed with battery or without battery storage.

The primary component in grid-connected PV systems is the inverter. The inverter converts the DC power produced by the PV array into AC power consistent with the voltage and power quality requirements of the utility grid, and automatically stops supplying power to the grid when the utility grid goes offline. At night and during other periods when the electrical loads are greater than the PV system output, the balance of power required by the loads is received from the electric utility. This safety feature is required in all grid-connected PV systems, and ensures that the PV system will not continue to operate and feed back into the utility grid when the grid is down for service or repair. Figure 2.1 presents a diagram of grid-connected PV system.

Figure 2.1 Diagram of grid-connected PV system

2.2.2 Stand-alone PV systems

Stand-alone systems are designed to operate independent of the electric utility grid, and are generally designed and sized to supply certain DC and/or AC electrical loads. The simplest type of stand-alone PV system is a direct-coupled system, where the DC output of a PV module or array is directly connected to a DC load. Since there is no electrical energy storage (batteries) in direct-coupled systems, the load only operates during sunlight hours, making these designs suitable for common applications such as ventilation fans, water pumps…etc. Matching the impedance of the electrical load to the maximum power output of the PV array is a critical part of designing well-performing direct-coupled system. In order to extract maximum power from the PV array, DC to DC converters are required. The standalone PV system is shown in figure 2.2.

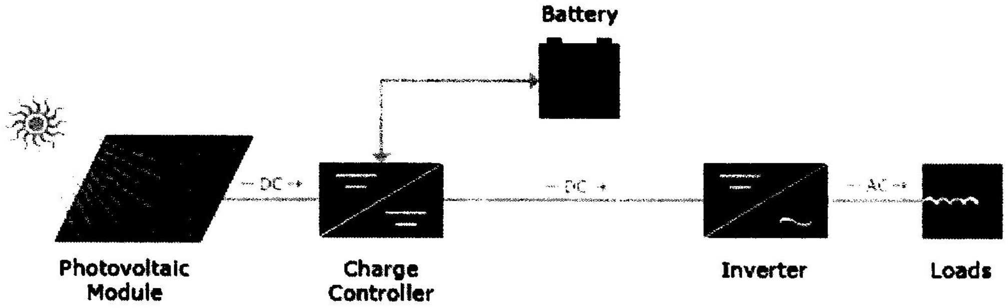

Figure 2.2 Standalone PV system

2.2.3 Hybrid systems

A system with more than one source of power is called Hybrid system. It is often desirable to design a system with additional source of power. The most common type of hybrid system contains a gas or diesel powered engine generator. Another hybrid approach is a PV/Wind system. Adding a wind turbine to a PV system provides complementary power generation as shown in figure 2.3.

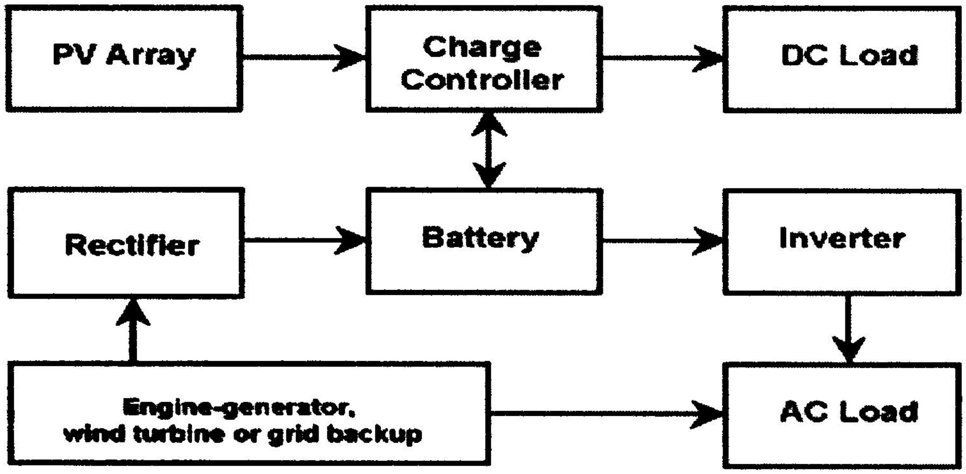

Figure 2.3 Diagram of a hybrid system

2.2 Photovoltaic module

A photovoltaic module is a group of cells, wired in series. The electrical output from a single cell is small; so multiple cells are connected in series and encapsulated (usually behind glass) to form a module. PV modules are thus the principle building blocks of a PV system, and any number of modules can be connected to give the desired electrical output in a PV array or system. This modular structure is a considerable advantage of PV systems, because new panels can be added to an existing system as and when required.

2.2.1 Working Principle of Photovoltaic Cell

When sunlight strikes **solar cell** surface, the cell creates charge carrier as electrons and holes. The internal field produced by junction separates some of positive charges (holes) from negative charges (electrons). Holes are swept into positive or p-layer and electrons are swept into negative or n-layer. When a circuit is made, free electrons have to pass through the load to recombine with positive holes; current can be produced from the cells under illumination. The individual **solar cells** are connected together to make a module (called '**solar module**' or 'PV module') to increase current and the modules are connected in an array (called 'solar array' or 'PV array'). The Stand-Alone PV system is designed to operate independently of the electric utility grid. Many environmental conditions like temperature and irradiation affect the system.

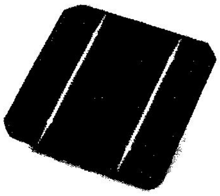

Figure 2.4 Solar Cell

2.5 Battery

A battery is an electrochemical device that stores electrical energy in form of direct current. Since a photovoltaic system's power output varies throughout any given day, the battery storage system can provide a relatively constant power source, even when the photovoltaic system is disconnected for repair and maintenance or producing minimal power in periods of reduced insolation.

2.5.1 Types of Battery

Many types of battery are manufactured today, each with specific design and performance characteristics suited for particular applications. Each battery type or design has its individual strengths and weaknesses. In PV systems, *lead-acid* batteries are most common due to their wide availability in many sizes, low cost and well understood performance characteristics. In a few critical, low temperature applications *nickel-cadmium* cells are used, but their high initial cost limits their use in most PV systems. There is no "perfect battery" and it is the task of the PV system designer to decide which battery type is most appropriate for each application. In general, electrical storage batteries can be divided into two major categories, primary and secondary batteries. (Botto, 2009)

- **Primary Batteries-** Primary batteries can store and deliver electrical energy, but cannot be recharged. Typical carbon-zinc and lithium batteries commonly used in consumer electronic devices are primary batteries. Primary batteries are not used in PV systems because they cannot be recharged.
- **Secondary Batteries-** A secondary battery can store and deliver electrical energy, and can also be recharged by passing a current through it in an opposite direction to the discharge current. Common lead-acid batteries used in automobiles and PV systems are secondary

batteries. Table 1 lists common secondary battery types and their characteristics which are of importance to PV system designers.

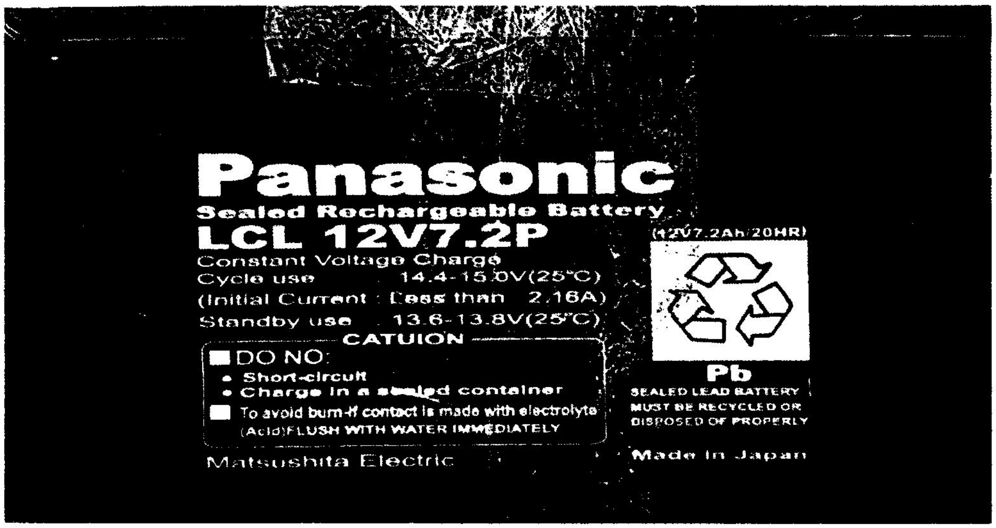

Figure 2.5 Panasonic battery LCL 12v7.2p 12v7.2ah

2.6 Charge Controllers

Charge controllers are included in most photovoltaic systems to protect the batteries from overcharge or excessive discharge. Overcharging can boil the electrolyte from the battery and cause failure. Allowing the battery to be discharged too much will cause premature battery failure and possible damage to the load. The controller is a critical component in the PV system.

A controller's function is to control the system depending on the battery state-of-charge (SOC). When the battery nears full SOC the controller redirects or switches off all or part of the array current. When the battery is discharged below a preset level, some or the entire load is disconnected if the controller includes the low voltage disconnect (LVD) capability. Most controllers use a measurement of battery voltage to estimate the state-of-charge. The controller voltage must be compatible with the nominal system voltage and it must be capable of handling the maximum current produced by the PV array.

Photovoltaic panels work by pumping current through the battery in one direction. At night, the panels may pass a bit of current in the reverse direction, causing a slight discharge from the battery. In most controllers, charge current passes through a semiconductor (a transistor) which acts like a valve to control the current. It prevents reverse current without any extra effort or cost. In some controllers, an electromagnetic coil opens and closes a mechanical switch. This is called a relay. The relay switches off at night, to block reverse current.

Subsequently, charge controllers act to prevent overcharge of the battery so as to ensure optimum performance and long life span of the battery. This is achieved by reducing the flow of energy to the battery when the battery reaches a specific voltage. When the voltage drops due to lower sun intensity or an increase in electrical usage, the controller again allows the maximum possible charge. This is called "voltage regulating." It is an essential function of all charge controllers.

Charge controllers also have the feature of low voltage disconnect which disconnects the load when the battery is discharged to a specific percentage of its rated capacity. Overload is a condition charge controllers act to prevent. A circuit is overloaded when the current flowing in it is higher than it can safely handle. This can cause overheating and can even be a fire hazard. Overload can be caused by a fault (short circuit) in the wiring, or by a faulty appliance (like a frozen water pump). Some charge controllers have overload protection built in, usually with a push-button reset. Built-in overload protection can be useful, but most systems require additional protection in the form of fuses or circuit breakers.

2.6.1 Types of controllers

There are two basic types of controllers used for small PV systems. These are Pulse Width Modulation (PWM) controllers and Maximum Power Point Tracking (MPPT) controllers.

PWM Controllers

A pulse width modulation controller is a circuity that sends out a series of short charging pulses to the battery - a very rapid "on-off" switch. The controller constantly checks the state of the battery to determine how fast to send pulses, and how long (wide) the pulses will be. In a fully charged battery with no load, it may just "tick" every few seconds and send a short pulse to the battery. In a discharged battery, the pulses would be very long and almost continuous, or the controller may go into "full on" mode. The controller checks the state of charge on the battery between pulses and adjusts itself each time.

MPPT Controllers

Maximum Power Point Tracking charge controller is an electronic DC to DC circuitry that optimizes the match between the solar array (PV panels), and the battery bank or utility grid. To put it simply, they convert a higher voltage DC output from solar panels (and a few wind generators) down to the lower voltage needed to charge batteries.

Some controllers regulate the flow of energy to the battery by switching the current fully on or fully off. This is called "on/off control." Others reduce the current gradually. This is called "pulse width modulation" (PWM). Both methods work well when set properly for your type of battery. A

PWM controller holds the voltage more constant. If it has two-stage regulation, it will first hold the voltage to a safe maximum for the battery to reach full charge. Then, it will drop the voltage lower, to sustain a "finish" or "trickle" charge.

The voltages at which the controller changes the charge rate are called set points. When determining the ideal set points, there is some compromise between charging quickly before the sun goes down, and mildly overcharging the battery. The determination of set points depends on the anticipated patterns of usage, the type of battery, and to some extent, the experience and philosophy of the system designer or operator. Some controllers have adjustable set points, while others do not.

2.7 Inverters

Inverters which are also known as Power conditioning units are necessary in any stand-alone PV system with ac loads. The choice of inverter will be a factor in setting the dc operating voltage of your system. When specifying an inverter, it is necessary to consider requirements of both the dc input and the ac output. All requirements that the ac load will place on the inverter should be considered, not only how much power but what variation in voltage, frequency, and waveform can be tolerated. On the input side, the dc voltage, surge capacity, and acceptable voltage variation must be specified. Selecting the best inverter for an application requires a study of many parameters. The choice of inverter will affect the performance and reliability of a PV system.

2.7.1 Characteristics of Inverters

Stand-alone inverters typically operate at 12, 24, 48 or 120 volts dc input and create 120 or 240 volts ac at 50 Hertz. The inverter designed in this study takes 12V dc input and gives output of 220V at 50Hz. The selection of the inverter input voltage is an important decision because it often dictates the system dc voltage; the shape of the output waveform is an important parameter. Inverters are often categorized according to the type of waveform produced:

1. Square wave,
2. Modified sine wave
3. Sine wave.

The output waveform depends on the conversion method and the filtering used on the output waveform to eliminate spikes and unwanted frequencies that result when the switching occurs. Square wave inverters are relatively inexpensive, have efficiencies above 90 percent, high harmonic frequency content, and little output voltage regulation. They are suitable for resistive loads and incandescent lamps. Modified sine wave inverters offer improved voltage regulation by varying the duration of the pulse width in their output. Efficiencies can reach 90 percent. This type of inverter can be used to operate a wider variety of loads including lights, electronic equipment, and most motors. However, these inverters will not operate a motor as efficiently as a sine wave inverter because the energy in the additional harmonics is dissipated in the motor windings. Sine wave inverters produce an AC waveform as well as that from most electric utilities.

They can operate any AC appliance or motor within their power rating. In general, any inverter should be oversized 25 percent or more to increase reliability and lifetime. This also allows for modest growth in load demand.

CHAPTER THREE

3.0 METHODOLOGY

The design of the Inverter circuit and the Charge control circuit were simulated using Proteus 8 Professional software. PV system design is a process of determining capacity (in terms of power, voltage and current) of each component of a stand-alone photovoltaic power system with the view to meeting the load requirement. The designing is done following the steps given below.

The photovoltaic system was first modelled with Autodesk Inventor (AutoCAD) to give an idea of how the design will look like. The electronic parts were later taken into consideration.

The design steps for the completion of the project are highlighted below;

1. Solar panel specification and design layout
2. Determine capacity of Battery
3. Design of a power inverter circuitry
4. Design of a charge controller circuitry
5. Simulation of the circuitries
6. Implementation
7. Testing the design
8. Cost Analysis.

3.1 Block Diagram of the PV System

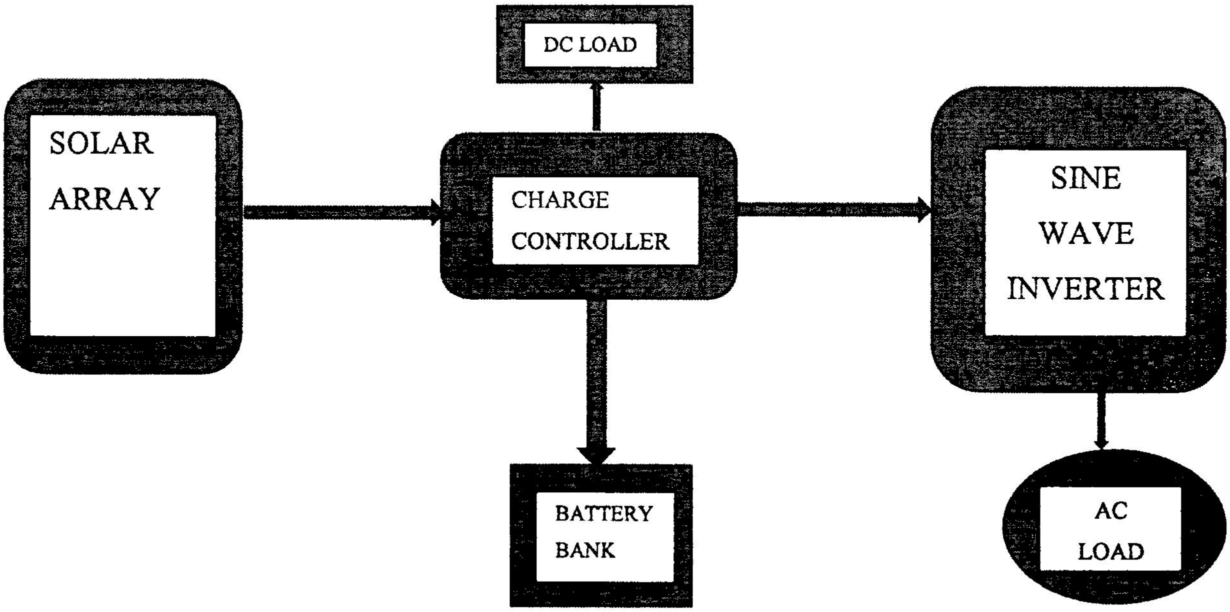

Figure 3.1 Block diagram of the Stand-alone photovoltaic system

3.3 Block description

1. Solar array: A solar array consists of one or many such panels. A *photovoltaic array*, or *solar array*, is a linked collection of *solar* modules. The power that one module can produce is seldom enough to meet requirements of a home or a business, so the modules are linked together to form an array. This is the component that converts the photon energy from the sun to dc electrical energy. Photovoltaic cell or solar cell, which generates electricity from the sun light, is the main and primary component in a PV system. Current and voltage generated depend on the area of the cell. A 13.5"x13.5" size solar cell can generate voltage of about 0.55volt and a current density of 30–35mA/cm^2. A solar panel is made of a collection of these basic solar cells. To meet voltage and current requirements of a particular system, a number of panels are connected in series (to increase voltage) and in parallel (to increase current) combinations forming a solar array.

2. Charge controller: This is a device that regulates the rate at which the battery charges and also the maximum energy the PV array takes from the sun. It enables the battery bank to last longer as it prevents overcharging. To regulate and monitor current flow between PV array and battery, a device, called charge controller, is used. The main function of solar charge controller is to limit the flow at which electric current is added to or drawn from batteries. It prevents overcharging and protect battery from voltage fluctuation. Two types of charge controllers are available: solar charge controller with PWM based technology and solar charge controller with MPPT based technology. In this work MPPT design based charge controller is employed

3. Inverter: A power inverter is an electronic device or circuitry that changes direct current (DC) to alternating current (AC). The input voltage, output voltage and frequency, and overall power handling depend on the design of the specific device or circuitry. The inverter does not produce any power, but it should be capable of efficiently handling the power is provided by the DC source. Inverter (also known as power conditioning unit) is the heart of the system. Most of the applications in home generally use AC current, whereas PV module and battery bank are power source of DC current. Inverter does the job of converting DC power to AC power in a PV system.

4. Battery bank: This is the arrangement of batteries that is necessary to provide the power and backup for the days/duration which the solar array is unable to generate nor supply availability from the local electricity provider. Storage battery is the vital component of standalone PV system. Its function is to store energy during sunshine hours and supply current to load during non-sunshine hours. Lead Acid battery, VRLA battery, Lithium-ion battery, etc. are different types of batteries that can be incorporated in solar PV system.

5. DC and AC load: A load is an electrical device that draws current from a supply. The devices that draw dc and ac currents from a supply are dc and ac loads respectively. Power consumption units are load for a PV system to be planned. A proper load estimation is necessary for designing a standalone PV system. For the purpose of PV system design, electrical loads may be classified broadly as either resistive or inductive. Resistive loads do not necessitate any significant surge current when energized. Like light bulb, electric heater etc. are resistive loads. On the other hand, inductive load requires a large amount of surge current when first energized which is about three times the normal energy requirement. Fan, electric motor, air-conditioner etc. are inductive load. Depending on the load estimation of a project a proper design can be implemented.

3.4 Solar panel Specification and Design Layout

The Solar panel is an essential component of a standalone PV system. When PV modules are connected in series in a small group it is called PV string and PV array is a collection of PV strings. According to the voltage and current rating PV array design should be done. From PV panel to battery there are long cable so we must consider the voltage drop and subsequent energy loss in it. Let us denote the cable efficiency by **η_{Cable}**. Typically, in a standalone system, 3% voltage loss is considered giving **ηCable** = 97%. So, PV panel voltage minimum should be **V_{PV}**, given by

$$V_{PV} = \frac{CC_{Volt}}{\eta_{Cable}}$$

Where; V_{PV} is the minimum PV panel voltage

CC_{Volt} is the PV panel voltage

η_{Cable} is the efficiency of the cable (Pal, Das, & Raju, 2015)

Similarly, energy required from the PV array (**E_{PV}**) can be calculated by the following equation (Pal, Das, & Raju, 2015)

$$E_{PV} = \frac{E_{Bat}}{\eta_{Cable}}$$

Where; E_{Bat} is the battery energy requirement

η_{Cable} is the efficiency of the cable

Whereas current requirement from PV array per hour can be calculated from (Pal, Das, & Raju, 2015)

$$I_{PV} = \frac{E_{PV}}{V_{PV} \times Daily\ Sunshine\ hour}$$

3.5 Determining of Capacity of Battery

The battery type generally suggested for use in solar power system application is deep cycle battery, specifically designed such that even when it is discharged to low energy level it can still be rapidly recharged over and over again for years. The battery should be large enough to store sufficient energy to operate all loads at night, cloudy or rainy days. Battery storage is conventionally measured in **Ah** (ampere hour) unit. The percentage of total charge, that is, energy of battery that can be allowed for running the load is referred as depth of discharge (**DoD**) of the battery. C-rating is also an important part of choosing a battery. It tells us what will be the optimum charging and discharging rate of a battery.

To meet requirements of the application load, two batteries were connected in parallel for current specification. If we take battery efficiency (ηBat)to be about 85% typically for lead acid battery, then energy required(E_{Bat}) from solar array to charge the battery bank is given by the following equation (Pal, Das, & Raju, 2015);

$$E_{Bat} = \frac{V_{dc} \times B_{Ah}}{\eta_{Bat}}$$

Where; V_{dc} is the system dc voltage

B_{Ah} is the energy storage capacity of the battery

η_{Bat} is the efficiency of the battery

3.5.1 Panasonic battery model LCL 12v7.2p 12v7.2ah

Two (2) lead-acid accumulator 12V, 7.2AH maintenance free rechargeable battery were connected in parallel as the main power source of the photovoltaic system.

Table 1 Battery Specifications

Battery cover and exhaust raft structure	Valve controlled sealed battery
Model	LCL12V7.2P LCR12V7.2P
Rated Capacity	7.2AH
Dimensions	151*64.5*94(mm)
State of charge	Maintenance free battery
Chemical type	Lead acid
certified product	UL certification
Scope of application	UPS, ship battery for electronic equipment

Features of the Panasonic battery LCL 12v7.2p 12v7.2ah;

1. Good safety performance: no electrolyte leakage under normal use, no battery expansion and rupture

2. Good discharge performance: stable discharge voltage and gentle discharge platform.
3. Good vibration resistance: the fully charged state of the battery is completely stable, with an amplitude of 4mm, vibration of 16.7HZ for 1 hour, no leakage, no battery expansion and rupture, open circuit voltage is normal.
4. Good resistance to over-discharge: 25 degrees Celsius, fully charged state of the battery for a fixed resistance discharge for 3 weeks (resistance is only equivalent to the resistance required by the battery 1CA discharge), recovery capacity is above 75%

3.6 Design of the Basic Modified Sinewave Inverter Circuit

The following explanation will walk us through the inverter circuit design: the ICSG3525 is rigged in its standard PWM generator/oscillator mode where the frequency of oscillation is determined by C1, R2 and P1. The range of P1 is from 100Hz to 500 kHz. Here we are interested in the 100 Hz value which ultimately provides a 50Hz across the two outputs at pin#11 and Pin#14. The above two outputs oscillate alternately in a push pull manner (totem pole), driving the connected mosfets into saturation at the fixed frequency - 50 Hz. The mosfets in response, "push and Pull the battery voltage/current across the two winding of the transformer which in turn generates the required mains AC at the output winding of the transformer. The peak voltage generated at the output would be anywhere around 300 Volts which must adjusted to around 220V RMS using a good quality RMS meter and by adjusting P2. P2 actually adjusts the width of the pulses at pin#11/#14, which helps to provide the required RMS at the output.

This feature facilitates a PWM controlled modified sine waveform at the output. The circuit diagram of the modified sinewave inverter is shown in figure 3.2.

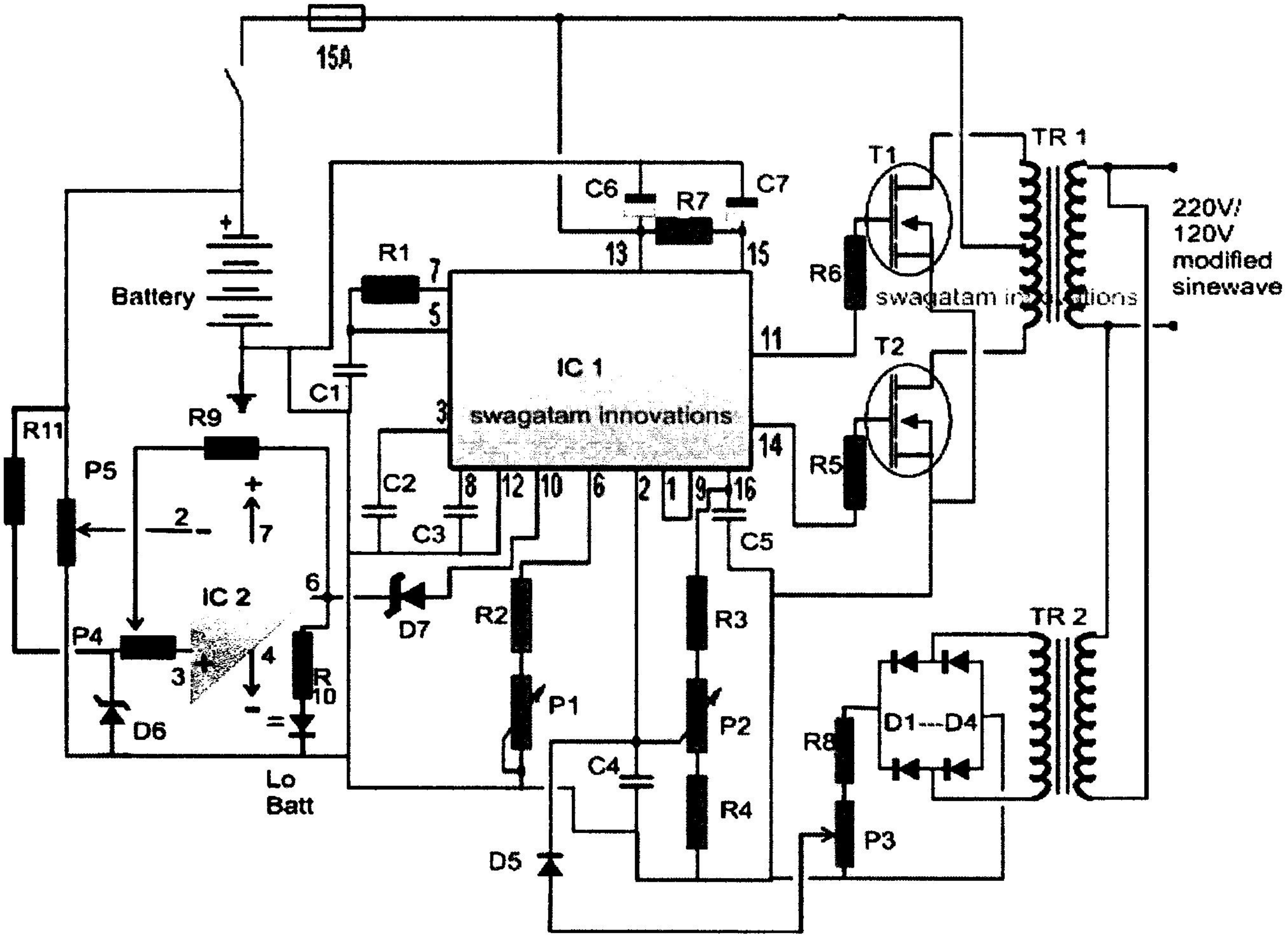

Figure 3.2 Modified Sinewave Inverter Circuit

3.6.1 Automatic Output Voltage Regulation Feature

Since the IC facilitates a PWM control pin-out this pin-out can be exploited for enabling an automatic output regulation of the system. Pin#2 is the sensing input of the internal built in error Opamp, normally the voltage at this pin (non inv.) should not increase above the 5.1V mark by default, because the inv pin#1 is fixed at 5.1V internally. As long as pin#2 is within the specified voltage limit, the PWM correction feature stays inactive, however the moment the voltage at pin#2 tends to rise above 5.1V the output pulses are subsequently narrowed down in an attempt to correct and balance the output voltage accordingly. A small sensing transformer TR2 is used here for acquiring a sample voltage of the output, this voltage is appropriately rectified and fed to pin#2 of the IC1. P3 is set such that the fed voltage stays well below the 5.1V limit when the output voltage RMS is around 220V.

This sets up the auto regulation feature of the circuit. Now if due to any reason the output voltage tends to rise above the set value, the PWM correction feature activates and the voltage gets reduced. Ideally P3 should be set such that the output voltage RMS is fixed at 220V. So if the above voltage drops below 250V, the PWM correction will try to pull it upward, and vice versa, this will help to acquire a two-way regulation of the output.

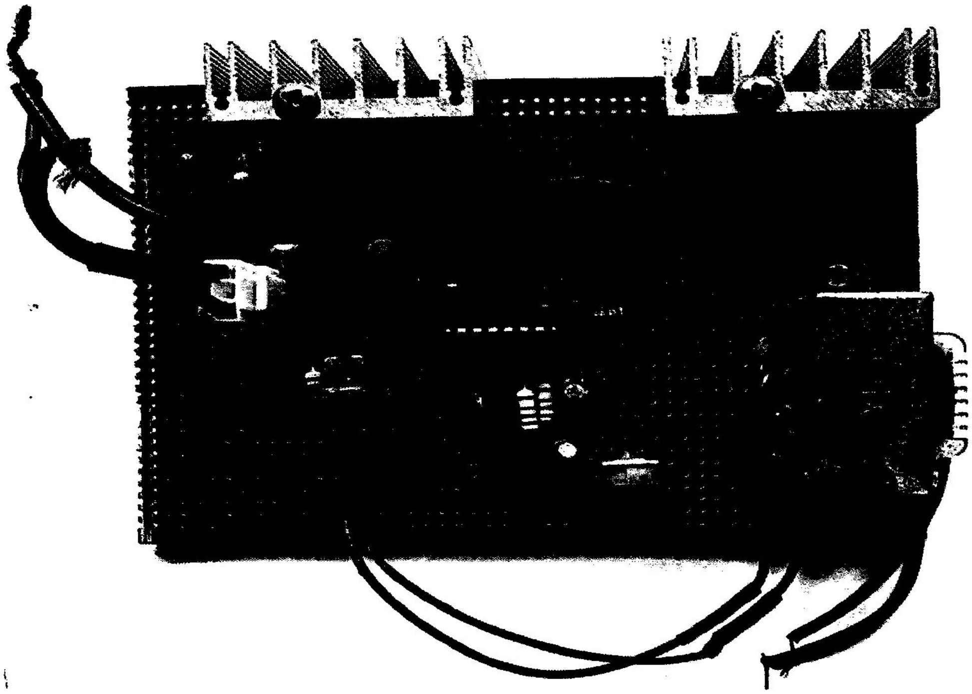

Figure 3.3 Picture of the Inverter circuit

3.6.2 Switch Frequency Calculation

The inverter doesn't produce any power; the power is provided by the DC source. The characteristic switching frequency of the SG3525IC is given by the relationship

$$f_s = \frac{1}{C_T(0.7R_T + 3R_D)}$$

Where; C_T, R_T and R_D are timing capacitor, timing resistor and discharge resistor respectively.

The output operating frequency at the gates is half of the switching frequency. I.e. to get the frequency of the 50Hz, the switching frequency should be 100Hz which is calculated using the following parameters:

$$C_T = 100nF, R_T = 142k\Omega, R_D = 35\Omega$$

$$f_{100Hz} = \frac{1}{0.1\times10^{-6}[(0.7\times142\times10^3)+(3\times35)]}$$

$$f_{100Hz} = 100.5Hz$$

3.8 Charge Controller Specification

The solar charge controller is generally sized in a way that will enable it perform its function of current control. The solar controller uses shunt solar regulation, when battery voltage exceeds a set voltage, typically set to 13,8V. A good charge controller must be able to withstand the array current as well as the total load current and must be designed to match the voltage of the PV array as well as that of the battery bank. The circuit disconnects the battery if the battery voltage drops below an adjustable point, typically 10.5V.

3.8.1 Charging

There is no diode between the solar panel and the load. This function is performed by Q2, a mosfet, used in reverse. The diode in the mosfet ensures that current will always flow from the PV panel to the load. If a significant voltage is present over Q2, Q3 turns on, charging C4, this allows U2c and U3b to turn mosfet Q2 on. Now the volt drop across the mosfet is determined by I*R, much lower than with a diode. C4 periodically discharges through R7, then Q2 is turned off. If current was flowing from the Photo Voltaic panel, the self-induced EMF across inductor L1 ensures that Q3 is turned on promptly. This happens many times a second. In the case where current was flowing to the PV panel at the time Q2 turned off Q3 will not be turning on again and D2 limits L1's self-induced EMF. D2 may just be a 1A diode, but that's 1A continuously, and as the test is only performed periodically, D2 can handle currents much higher than 1A.VR1 sets the maximum voltage. U2d's output goes high when the system voltage is above 13.8V, this turns Q1 on, shorting the solar panel out. Above 13,8V U2d also ensures U3b's output is low, effectively disconnecting the solar panel from the system voltage. The circuit diagram of the charge controller is shown in figure 3.5.

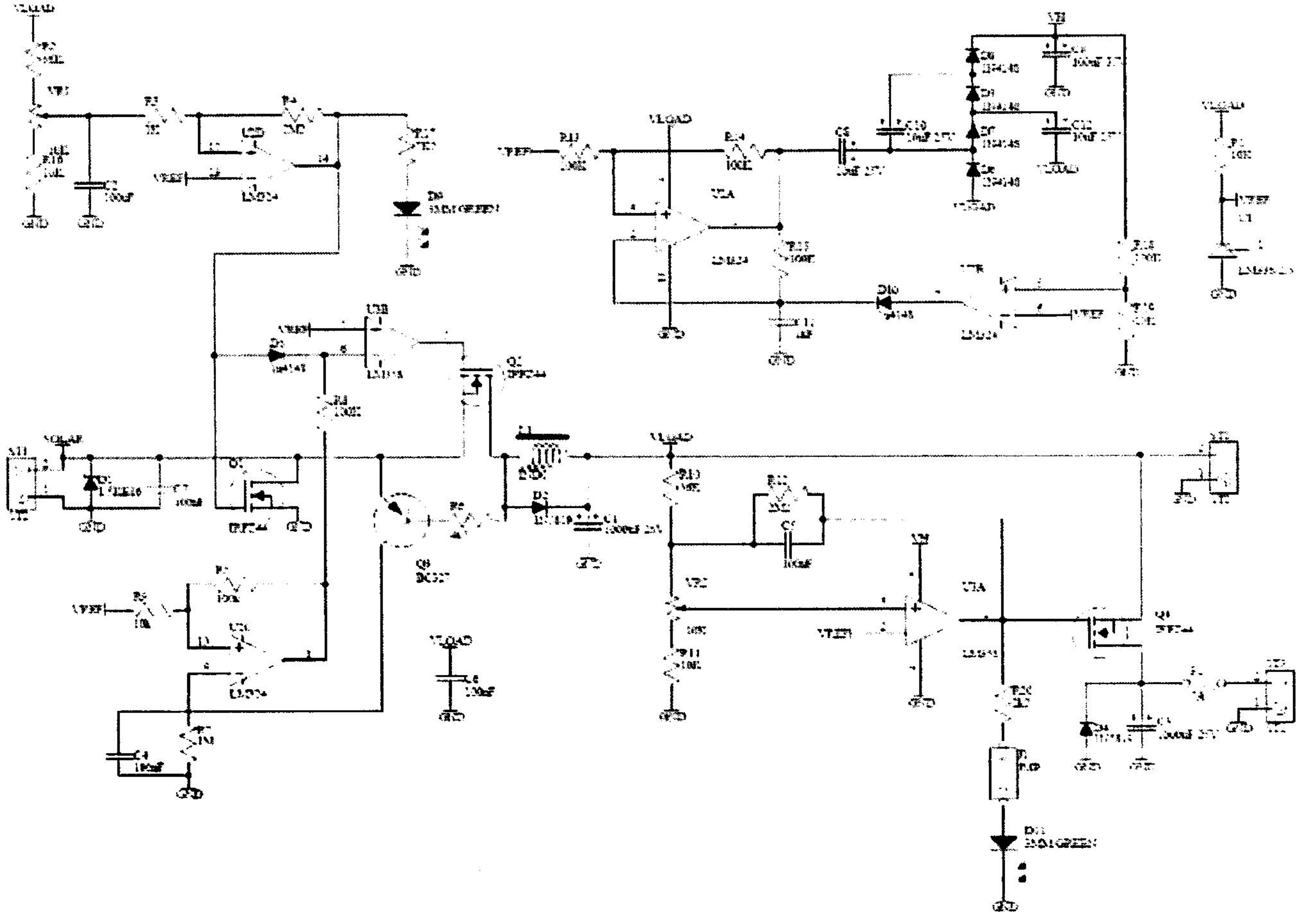

Figure 3.5 Charger controller circuit

3.8.2 High drive N channels

Q2 and Q4 are N channel mosfets and needs to be turned on with a voltage higher than the system voltage. For this, the circuit U2a and the associated diodes and capacitors create a high voltage VH. This voltage is used as the supply to U3, allowing the outputs to rise above the system voltage. U2b and D10 provides some regulation of the High drive voltage to about 24V. At this voltage, the Mosfets will see at least 10V across the Gate and Source, ensuring a low on resistance and therefor a low heat dissipation. N channel mosfets typically have a significantly lower on resistance than P channel mosfets, this is the reason they were chosen for the design.

3.8.3 Low voltage cutout

Q4 and U3a and associated resistors and capacitor create a low voltage cutout circuit. Once again a MOSFET, Q4 is used in an unconventional way, the diode in the MOSFET ensures current can always flow into the battery. If the voltage is above the set point, the MOSFET is turned on, allowing a lower volt drop during charging, but more importantly allows current to flow from the battery to power the system when the solar panels are not providing the system with power. A fuse protects against damage in case of a short circuit on the load side. The hardware construction of the charge controller is shown in figure 3.6.

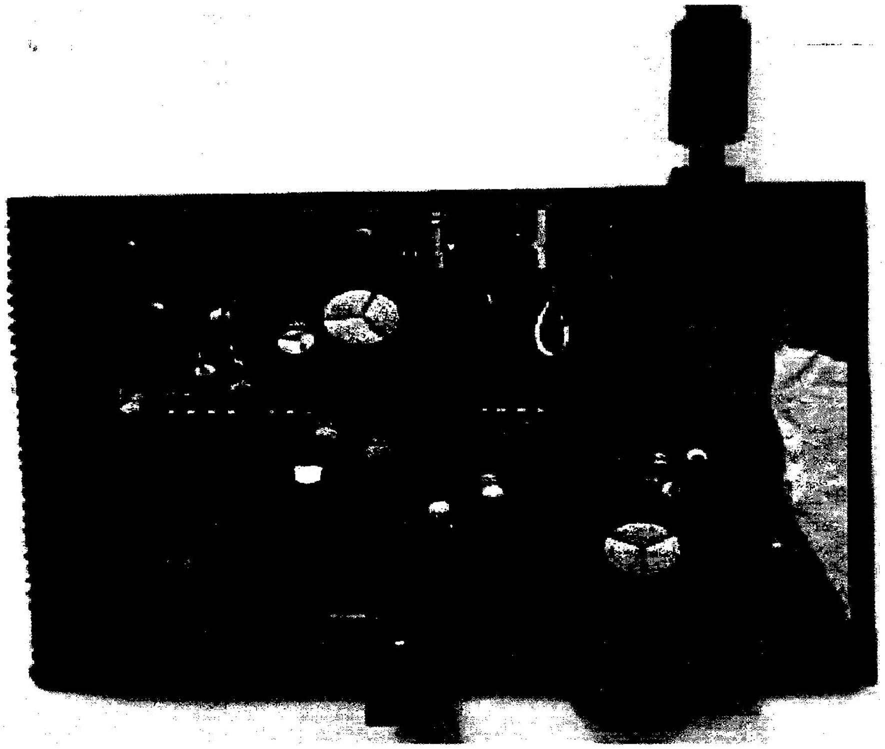

Figure 3.6 Picture of the charge controller circuit

3.9 System layout

The hardware layout of the project is shown in figure 3.7 through figure 3.9.

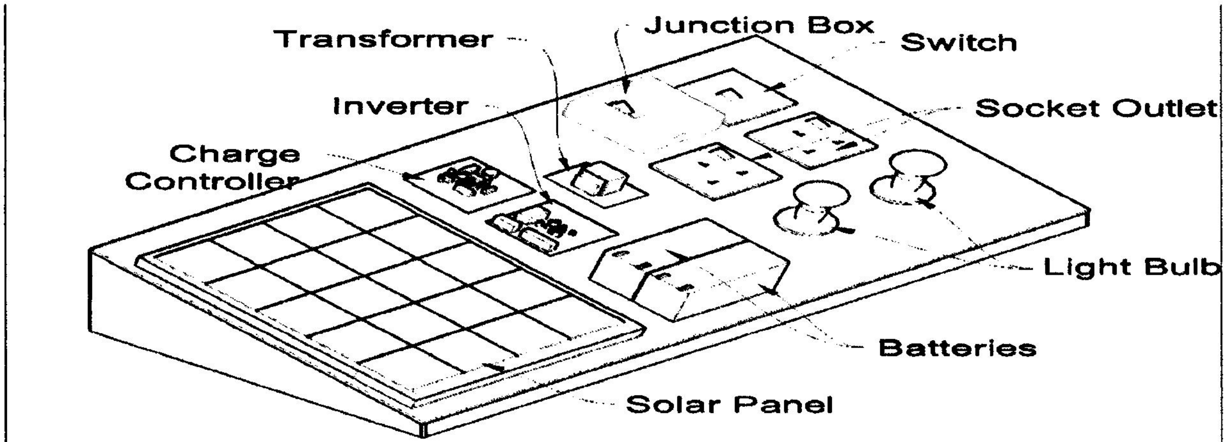

Figure 3.7 The labelled design of the photovoltaic system

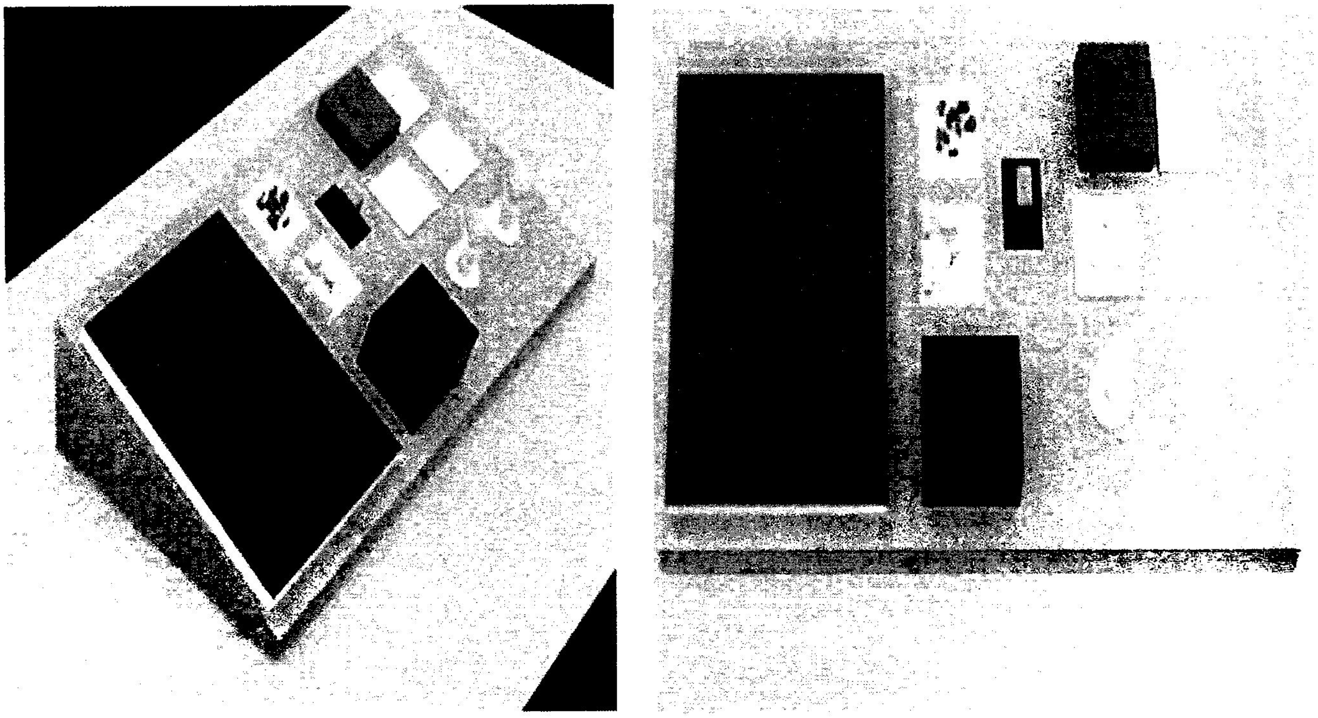

Figure 3.8 Diagrams showing 3D model of the design

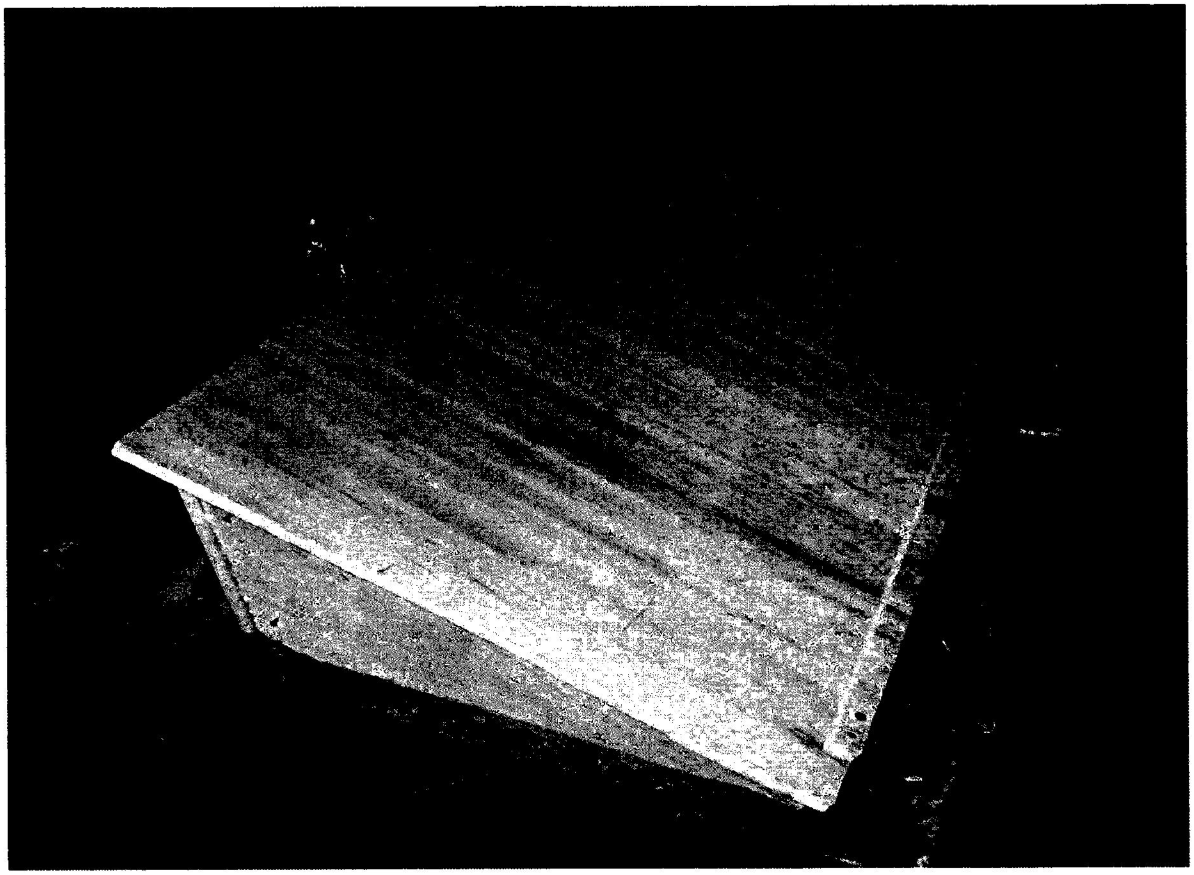

Figure 3.9 Constructed supporting structure for the PV system components

The step by step approach taking in the construction of this project started with the solar panel, batteries connected in parallel, switch, battery charge controller circuit, inverter circuit and the load.

The tools and instruments used include:

- Soldering lead and Soldering Iron
- Lead sucker
- Copper stripping knife
- Cutter
- Razor blade
- Plier
- Digital Multimeter
- Vero and bread board

To conform to the requirement of this project, temporary construction of the prototype was done on bread board before finally transferring it onto the vero-board for permanent soldering. The circuit was constructed, tested and put to use under proper load conditions. In other to achieve accuracy in the design, some necessary adjustments were made to some of the components used. Figure 3.10 shows the breadboard layout of the project and testing using the oscilloscope.

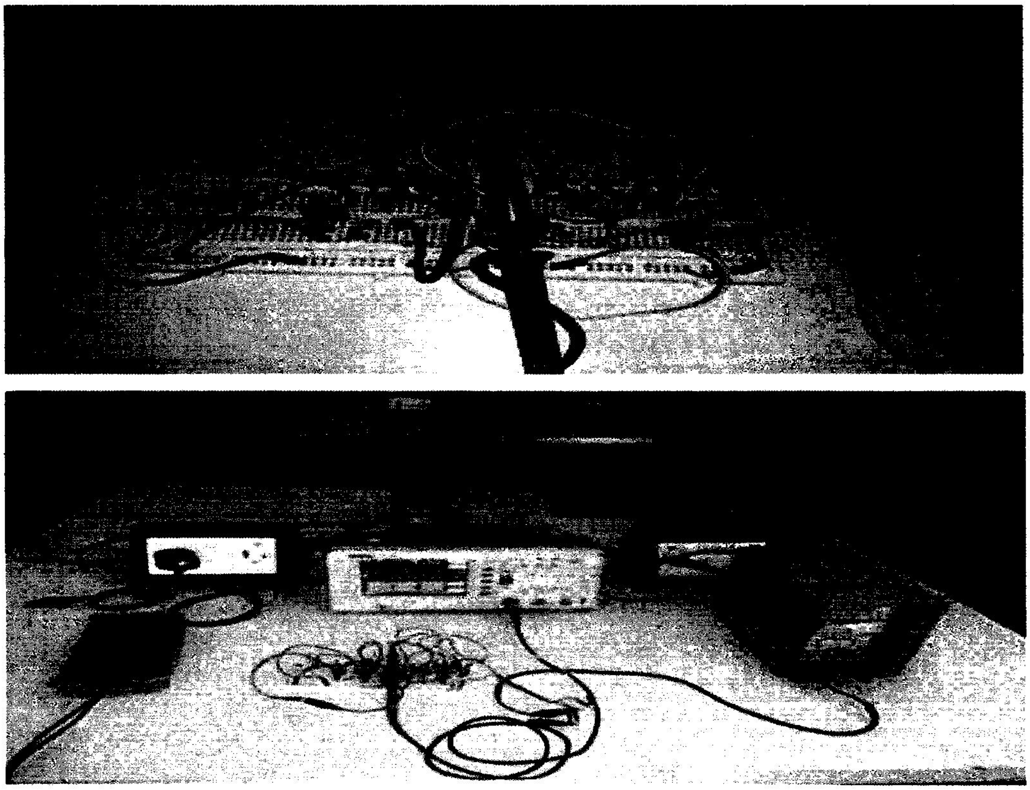

Figure 3.10 Implementation of the Inverter Circuit Design on a Breadboard

The complete unit was housed on top of a flat wood. Battery terminals for positive and negative, power switch and handle were fixed in their allotted slots and connected to their respective points on the circuit. The casing was earthed and each stages carefully arranged inside and connected together.

CHAPTER FOUR

4.0 RESULTS AND DISCUSSIONS

The objectives of this project are to design and construct a stand-alone Photovoltaic system. The main part of the system is the solar panel, batteries connected in parallel, the switch, the charging controller circuit, the inverter circuit and the load. This chapter covers the results of the design, development and testing of the overall system.

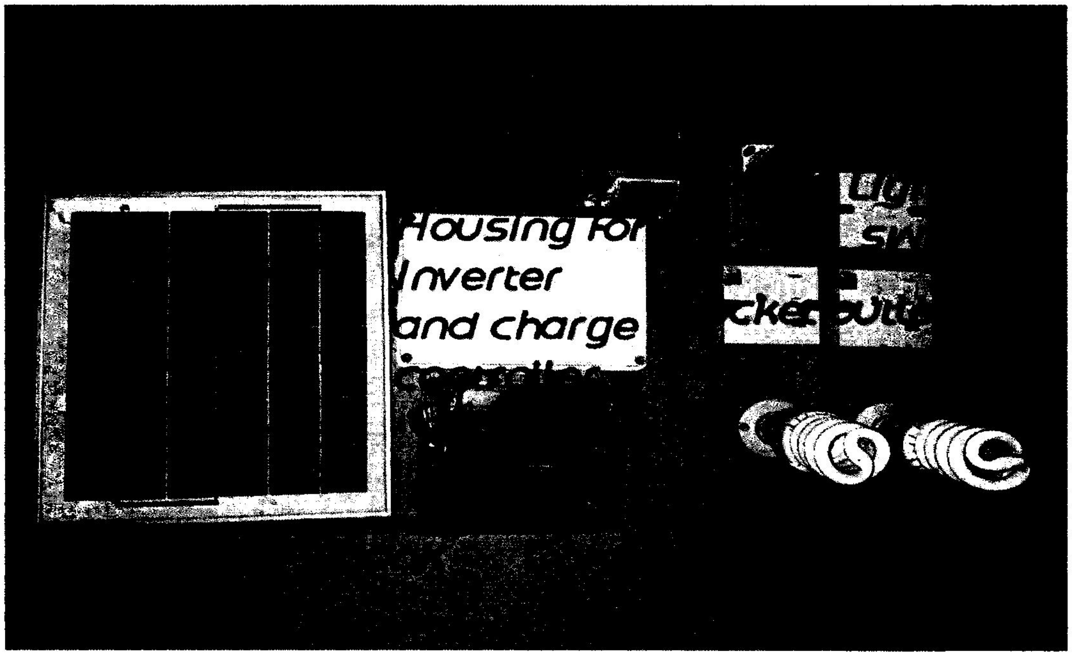

Figure 4.1. The final design of the photovoltaic system

4.1 Testing

While constructing, all components used were tested to ascertain their conformity with the required standard of the objective of this project. The output voltage of the inverter was a square wave, filtered by a 2μF/400V capacitor connected across the output terminals to remove the unwanted harmonics and leaving smooth sine waveform output voltage.

The most ordinary and popular technique for generating True sine Wave is Pulse Width Modulation, Sinusoidal Pulse Width Modulation is the best technique for this. This Pulse Width Modulation technique involves generation of a digital waveform, for which the duty cycle can be modulated in such a way so that the average voltage waveform corresponds to a pure sine wave. The simplest way of producing the Sine Pulse Width Modulation signal is through comparing a low power sine wave reference with a high frequency triangular wave. This Sine Pulse Width Modulation signal can be used to control switches. Throughout an LC filter, the output of Full Wave Bridge Inverter with SPWM signal will generate a wave approximately equal to a sine wave, as illustrate in fig 4.3. This technique produces a much more similar AC waveform than that of others. The primary harmonic is still there and there is relatively high amount of higher level harmonics in the signal.

Figure 4.2 Inverter output waveform

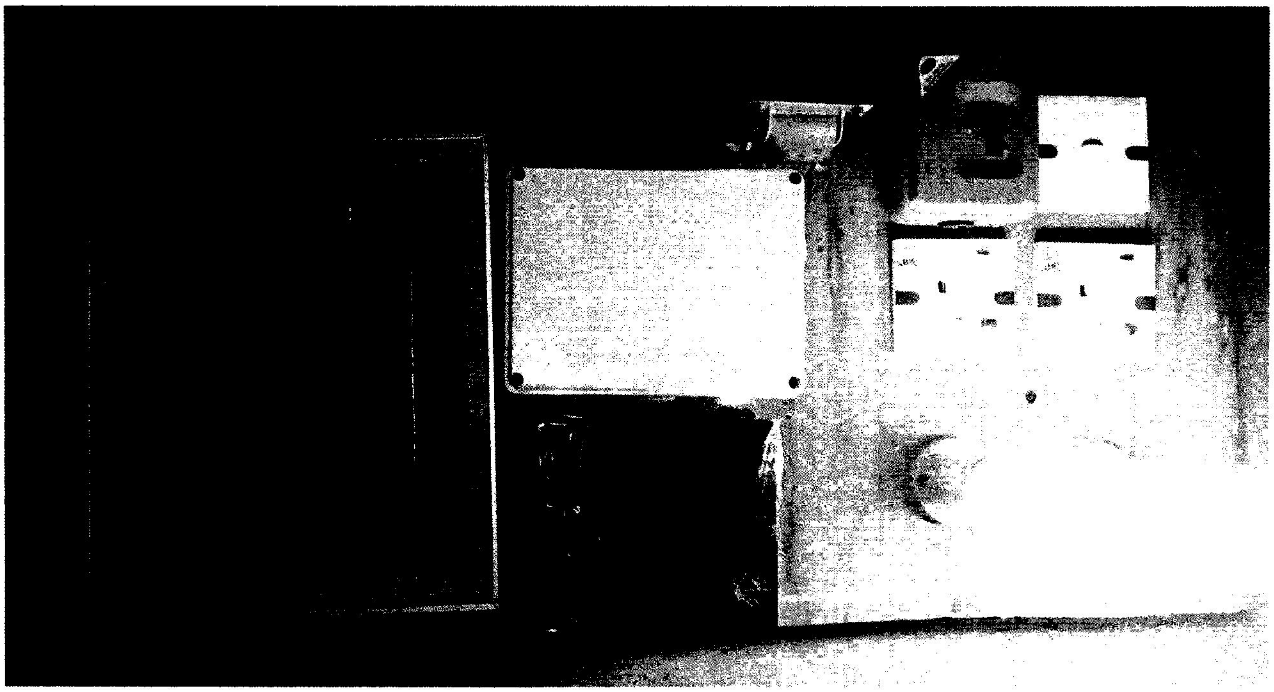

Figure 4.4 Final testing of the design

4.3 Filter for Total harmonic distortion

Switching devices used to convert power introduce harmonics in the system. The total harmonic distortion, or THD, of a signal is a measurement of the harmonic distortion present and is defined as the ratio of the sum of the powers of all harmonic components to the power of the Fundamental frequency.

When load is connected to a quality stand-alone inverter, the amplitude and the frequency of the system must be constant, to prevent any damage of the load.

4.4 Testing of the Inverter under load condition

The duration at which the inverter discharges under load condition depends on the total power of load connected to its output terminal and the power rating of the battery connected to its input terminal. Bearing in mind that total load must not exceed 400watts as that is the power handling capacity of the n-channel enhancement MOSFETs.

4.4.1 Discharge duration

a. Battery power rating = 12volts, 7.2Ampere hour

   When total load = 100watts

   Then duration = $12 \times \frac{7.2}{100} = 0.864\ hr = 51.84min$

b. Battery power rating = 12volts, 7.2Ampere per hour

   When load = 150watts

   Then duration = $12 \times \frac{7.2}{150} = 0.576\ hr = 34.56min$

c. Battery power rating = 12volts, 7.2Ampere per hour

   When load = 200watts

   Then duration = $12 \times \frac{7.2}{200} = 0.432\ hr = 25.92min$

The discharge curve is given by the plot of load against the discharge duration in figure 4.5

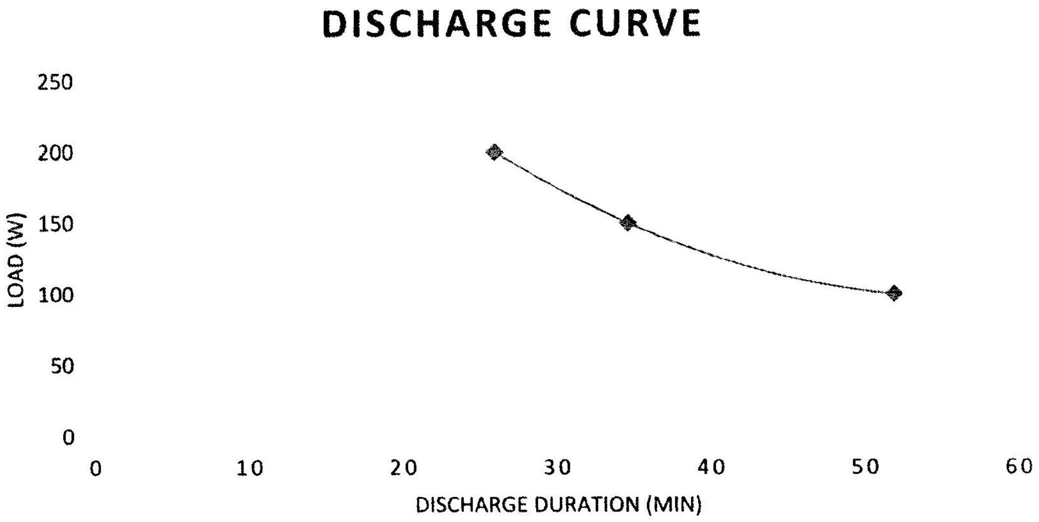

Figure 4.5 Discharge curve

The discharge curve shown in figure 4.5 shows the relationship between the load on the system and the discharge duration. The load is seen to be inversely proportional to the discharge duration. The duration decreases as load increases and vice versa.

In a standalone PV system, the way in which battery is charged are generally much different. The battery charging in PV system consists of three modes; normal or bulk charge, finishing or float charge and equalizing charge.

4.5 Efficiency

Efficiency is the ratio of the electrical power output P_{out}, compared to the solar power input, P_{in}, into the PV cell. P_{out} can be taken to be P_{MAX} since the solar cell can be operated up to its maximum power output to get the maximum efficiency.

$$\eta = \frac{P_{out}}{P_{in}} \Rightarrow \eta_{MAX} = \frac{P_{MAX}}{P_{in}}$$

The maximum efficiency η_{MAX} found from a light test is not only an indication of the performance of the device under test, but, like all of the I-V parameters, can also be affected by ambient conditions such as temperature and the intensity and spectrum of the incident light. For this reason, it is recommended to test and compare PV cells using similar lighting and temperature conditions

The efficiency of a photovoltaic system is the measurement of how much of the available solar energy a solar cell converts into electrical energy.

CHAPTER FIVE

5.0 CONCLUSION AND RECOMMENDATIONS

A stand-alone PV system of 400W rated output at 50Hz was designed and constructed. In this report, a complete design of a PV system was presented step by step. The type of battery used in the implementation of the design of the stand-alone solar system comprises rechargeable 12V lead-acid-batteries. A charge control unit was designed and constructed to facilitate for proper charging of the bank. The objectives of the project were achieved as well as the comprehensive understanding of PV systems

The presented work dealt with the analysis, design, and implementation of a Standalone Photovoltaic System (SAPV). Stand-alone PV (Photovoltaic) systems operate reliably and are the best option for many remote applications around the world. Obtaining reliable long-term performance from a PV system requires consistent sizing calculations and knowledge of PV performance, use of good engineering practices when installing equipment and developing and following a complete operation and maintenance plan. The variances in solar radiation can cause large difference in the system size. This is because the solar radiation gives the available sun hours

5.1 Future Work

1. Although the modified sinewave output could be okay with its RMS property and reasonably suitable for powering most electronic equipment, it can never match the quality of a pure sinewave inverter output.
2. A fault detection and protection system may be suggested in addition to monitoring system in the case of large power in order to improve the system reliability and stability.
3. Finally, the proposed photovoltaic system may be further implemented with Hybrid system. A fully digitalized implementation of the proposed system can give the better performance and suitable result. We can also develop a master grid to excess of energy, connected with the different sources.

It is highly recommended that stand alone photovoltaic system designers adopt this design as it incorporates all the aspect of its design and also any unforeseen losses in power due to equipment. The design is also simple to use and quite straight forward.

5.2 Critical Appraisal

The system components ratings are carefully and properly selected. The power inverter circuitry is based on SG3525 analog integrated circuit which eliminates additional external components. This significantly makes the design less complex and thereby ensures longer lifespan due to limited number of components.

However, a faster and more efficient design can be achieved using microcontroller based schematics.

REFERENCES

Aliyu, M. K. (2012). Solar energy for sustainable power supply in Nigeria. *SweetCrude reports.*

Bharathkumar, M., & Byregowda, H. V. (2014). Performance Evaluation of Grid Connected Solar Photovoltaic Power Plant Established in Karnataka. *IJIRSET*, 7.

Botto, V. (2009). *Solar PV System Sizing.* University of Nairobi.

Kofa, M. (2012, December 25). *Solar Energy for Sustainable power Supply in Nigeria*. Retrieved from Sweetcrude: sweetcrudereports.com

Mohammad, A., Vahid, M., & Mohsen, M. (2015). Types of Solar Cells and Application. *American Journal of Optics and Photonics*, 20.

Olusegun, Segun, & Taiwo. (2014). *Design and Construction of 1KW Power Inverter.* Ado Ekiti, Nigeria: Innovative System Design and Engineering.

Pal, A. M., Das, S., & Raju, N. B. (2015). Designing of a Standalone Photovoltaic System for a Residential Building in Gurgaon, India. *Sustainable Energy*, 14-24.

Benzekri, A. (2015) FPGA-Based intelligent dual-axis solar tracking control system, pp. 19.

Chetan Singh Solanki (2011). *Solar Photovoltaic: Fundamentals, Technologies and application*, PHI learning Pvt.

GSES India sustainable energy Pvt. Ltd., "Standalone Photovoltaic system design & installation", Second edition September 2014.

Guda, H. A and Aliyu U.O. Design of a standalone photovoltaic system for a residence in Bauchi, *International Journal of Engineering and Technology*, Volume 5 No.1, January 2015

H. Scheer,(2004), The Solar Economy: Renewable Energy for a Sustainable Global Future, Earthscan, 2015.

Khaled Bataineh, Doraid Dalalah "Optimal Configuration for Design of Stand-Alone PV System", Scientific Research, Smart Grid and Renewable Energy, 2012, 3, 139-147

Lurwan, S.M., Mariun, N. Hizam, H., Radzi, M.A.M. ,Zakaria, A., "Predicting power output of photovoltaic systems with solar radiation model" IEEE, Page(s) 304-308, 2014.

Mandeep, S. P., & Anisur, R. (2017). Design and estimation of reliability of an off grid solar photovoltaic (PV) power system in south east queensland. Industrial Engineering and Engineering Management (IEEM), 2017 IEEE International Conference on. Singapore: IEEE.

Manju, B.S., Ramaprabha, R; Mathur, B.L., "Modelling and control of standalone solar photovoltaic charging system", IEEE, Page(s) 78-8, March 2011.

Miro, Zeman, "Photovoltaic system",TU Delft Open Course Ware, 2014. vailable: http://ocw.tudelft.nl/fileadmin/ocw/courses/

Modeling and Implementation of a Stand-alone PV System using Boost Converter Department of Electrical Engineering National Institute Technology, Rourkela-769008 May, 2015

Planning and installing photovoltaic systems, (2008): a guide for installers, architects, and engineers / Deutsche Gesellschaft fur Sonnenenergie (DGS). - 2nd edition.

R.Wai, W. H. Wang, "High-Performance Stand-Alone Photovoltaic Generation System", IEEE Transactions on Industrial Electronics, vol.-55, no 1, pp. 240-250, January, 2008.

Ram Naresh Bharti, Rajib Kumar Mandal, (July - 2014) Modeling and Simulation of Maximum Power Point Tracking for Solar PV System using Perturb and Observe Algorithm International Journal of Engineering Research & Technology, Vol. 3 - Issue 7.

Renewable and Efficient Electric Power Systems, Gilbert M. Masters Stanford University

T. Salmi, M. Bouzguenda, A. Gagtli, "MATLAB/Simulink based modeling of solar photovoltaic cell," International journal of renewable energy research.

T.Markvart, A. Fragaki, J.N. Ross, "PV system sizing using observed time series of solar radiation" ELSVIER Solar energy 80 (2006) 46-50.

T. Fu Wu, H. S. Nien, C. L. Shen, T. M. Chen, "A Single-Phase Inverter System for PV

Wikipedia. (2018, January 26). Photovoltaic System. Retrieved from Wikipedia the Free Z. Sen, (2004), “Solar energy in progress and future research trends.” Progress in Energy and Combustion Science, 30, pp. 367-416, 2015.

https://www.homemade-circuits.com/sg3525-pure-sinewave-inverter-circuit/

http://www.opend.co.za/hardware/solarcharge1/index.html

http://www.leonics.com/support/article2_15j/articles2_15j_en.php

APPENDIX A

Bill of Materials

Table 2. Bill of Materials

S/N	Component/equipment	Cost(₦)
01	84×42cm wood planks	2,000
02	33×28cm 10W Solar panel	10,000
03	2×7AH UPS battery	8,000
04	750VA Transformer	10,000
05	Pack of inductor	1,000
06	Pack of capacitor	1,000
07	Pack of resistor	1,000
08	BC547 &BC557 Transistors	1,000
09	SG3525 IC	800
10	Nails	100
11	Screws	100
12	IC 555	1,000
13	Miscellaneous	14,000
		Total = 50,000

APPENDIX B

SG3525 IC Datasheet

SG2525A
SG3525A

REGULATING PULSE WIDTH MODULATORS

- 8 TO 35 V OPERATION
- 5.1 V REFERENCE TRIMMED TO ± 1 %
- 100 Hz TO 500 KHz OSCILLATOR RANGE
- SEPARATE OSCILLATOR SYNC TERMINAL
- ADJUSTABLE DEADTIME CONTROL
- INTERNAL SOFT-START
- PULSE-BY-PULSE SHUTDOWN
- INPUT UNDERVOLTAGE LOCKOUT WITH HYSTERESIS
- LATCHING PWM TO PREVENT MULTIPLE PULSES
- DUAL SOURCE/SINK OUTPUT DRIVERS

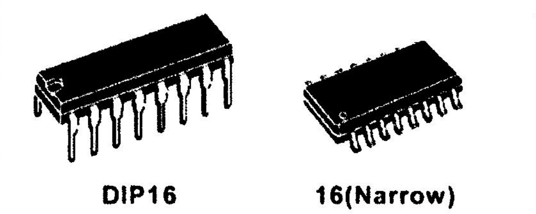
DIP16

16(Narrow)

DESCRIPTION

The SG3525A series of pulse width modulator integrated circuits are designed to offer improved performance and lowered external parts count when used in designing all types of switching power supplies. The on-chip + 5.1 V reference is trimmed to ± 1 % and the input common-mode range of the error amplifier includes the reference voltage eliminating external resistors. A sync input to the oscillator allows multiple units to be slaved or a single unit to be synchronized to an external system clock. A single resistor between the C_T and the discharge terminals provide a wide range of dead time adjustment. These devices also feature built-in soft-start circuitry with only an external timing capacitor required. A shutdown terminal controls both the soft-start circuity and the output stages, providing instantaneous turn off through the PWM latch with pulsed shutdown, as well as soft-start recycle with longer shutdown commands. These functions are also controlled by an undervoltage lockout which keeps the outputs off and the soft-start capacitor discharged for sub-normal input voltages. This lockout circuitry includes approximately 500 mV of hysteresis for jitter-free operation. Another feature of these PWM circuits is a latch following the comparator. Once a PWM pulses has been terminated for any reason, the outputs will remain off for the duration of the period. The latch is reset with each clock pulse. The output stages are totem-pole designs capable of sourcing or sinking in excess of 200 mA. The SG3525A output stage features NOR logic, giving a LOW output for an OFF state.

PIN CONNECTIONS AND ORDERING NUMBERS (top view)

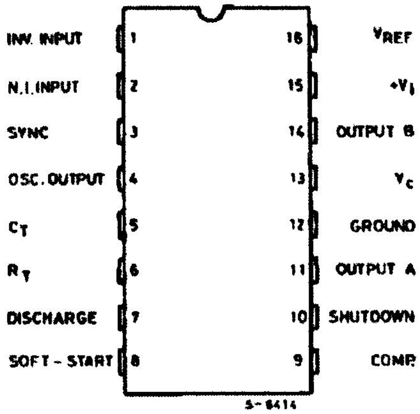

Type	Plastic DIP	SO16
SG2525A	SG2525AN	SG2525AP
SG3525A	SG3525AN	SG3525AP

ABSOLUTE MAXIMUM RATINGS

Symbol	Parameter	Value	Unit
V_i	Supply Voltage	40	V
V_C	Collector Supply Voltage	40	V
I_{OSC}	Oscillator Charging Current	5	mA
I_o	Output Current, Source or Sink	500	mA
I_R	Reference Output Current	50	mA
I_T	Current through C_T Terminal Logic Inputs Analog Inputs	5 – 0.3 to + 5.5 – 0.3 to V_i	mA V V
P_{tot}	Total Power Dissipation at T_{amb} = 70 °C	1000	mW
T_j	Junction Temperature Range	– 55 to 150	°C
T_{stg}	Storage Temperature Range	– 65 to 150	°C
T_{op}	Operating Ambient Temperature : **SG2525A** **SG3525A**	– 25 to 85 0 to 70	°C °C

THERMAL DATA

Symbol	Parameter		SO16	DIP16	Unit
$R_{th\ j-pins}$	Thermal Resistance Junction-pins	Max		50	°C/W
$R_{th\ j-amb}$	Thermal Resistance Junction-ambient	Max		80	°C/W
$R_{th\ j-alumina}$	Thermal Resistance Junction-alumina (*)	Max	50		°C/W

* Thermal resistance junction-alumina with the device soldered on the middle of an alumina supporting substrate measuring 15 × 20 mm 0.65 mm thickness with infinite heatsink.

BLOCK DIAGRAM

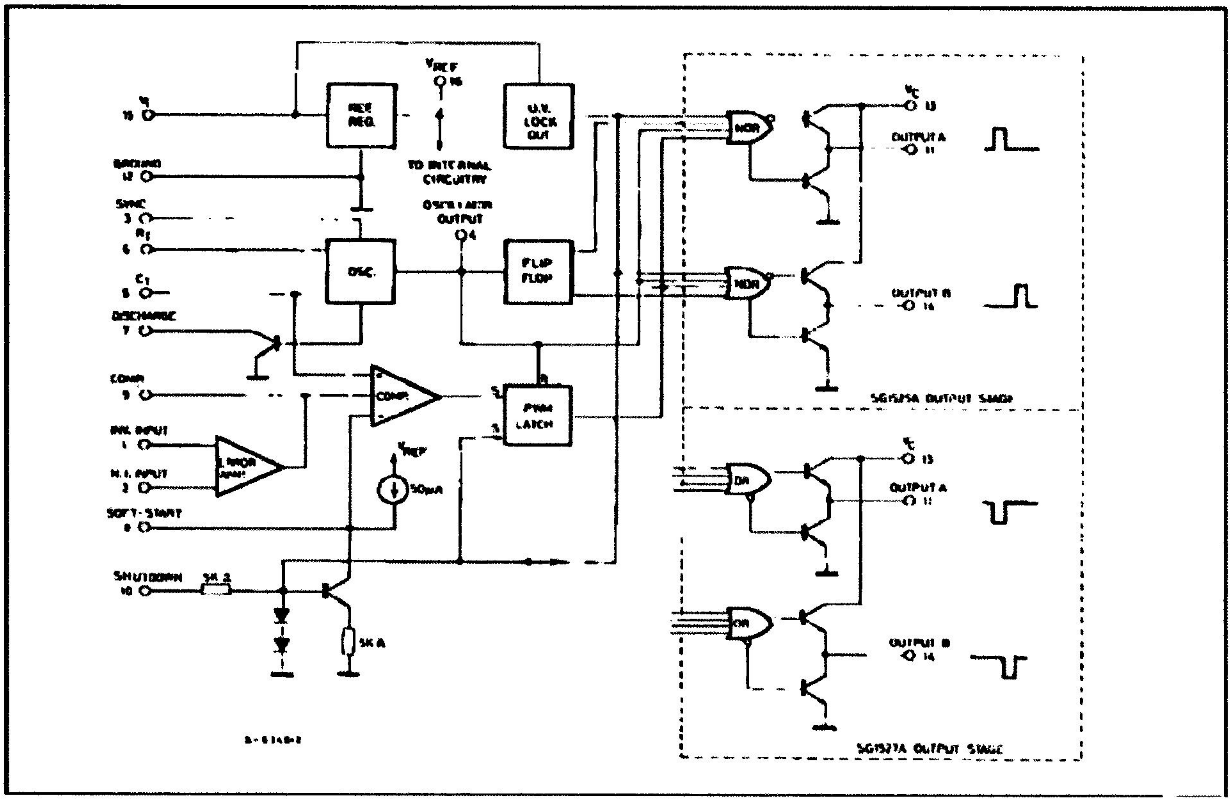

ELECTRICAL CHARACTERISTICS

(V# i = 20 V, and over operating temperature, unless otherwise specified)

Symbol	Parameter	Test Conditions	SG2525A			SG3525A			Unit
			Min.	Typ.	Max.	Min.	Typ.	Max.	
REFERENCE SECTION									
V_{REF}	Output Voltage	$T_j = 25\ ^\circ C$	5.05	5.1	5.15	5	5.1	5.2	V
ΔV_{REF}	Line Regulation	V_i = 8 to 35 V		10	20		10	20	mV
ΔV_{REF}	Load Regulation	I_l = 0 to 20 mA		20	50		20	50	mV
$\Delta V_{REF}/\Delta T^*$	Temp. Stability	Over Operating Range		20	50		20	50	mV
*	Total Output Variation	Line, Load and Temperature	5		5.2	4.95		5.25	V
	Short Circuit Current	$V_{REF} = 0$ $T_j = 25\ ^\circ C$		80	100		80	100	mA
*	Output Noise Voltage	10 Hz ≤ f ≤ 10 kHz, $T_j = 25\ ^\circ C$		40	200		40	200	μVrms
ΔV_{REF}^*	Long Term Stability	$T_j = 125\ ^\circ C$, 1000 hrs		20	50		20	50	mV
OSCILLATOR SECTION * *									
*, •	Initial Accuracy	$T_j = 25\ ^\circ C$		± 2	± 6		± 2	± 6	%
*, •	Voltage Stability	V_i = 8 to 35 V		± 0.3	± 1		± 1	± 2	%
$\Delta f/\Delta T^*$	Temperature Stability	Over Operating Range		± 3	± 6		± 3	± 6	%
f_{MIN}	Minimum Frequency	$R_T = 200\ K\Omega$ $C_T = 0.1\ \mu F$			120			120	Hz
f_{MAX}	Maximum Frequency	$R_T = 2\ K\Omega$ $C_T = 470\ pF$	400			400			KHz
	Current Mirror	$I_{RT} = 2\ mA$	1.7	2	2.2	1.7	2	2.2	mA
*, •	Clock Amplitude		3	3.5		3	3.5		V
*, •	Clock Width	$T_j = 25\ ^\circ C$	0.3	0.5	1	0.3	0.5	1	μs
	Sync Threshold		1.2	2	2.8	1.2	2	2.8	V
	Sync Input Current	Sync Voltage = 3.5 V		1	2.5		1	2.5	mA
ERROR AMPLIFIER SECTION (V_{CM} = 5.1 V)									
V_{OS}	Input Offset Voltage			0.5	5		2	10	mV
I_b	Input Bias Current			1	10		1	10	μA
I_{os}	Input Offset Current				1			1	μA
	DC Open Loop Gain	$R_L \geq 10\ M\Omega$	60	75		60	75		dB
*	Gain Bandwidth Product	$G_v = 0\ dB$ $T_j = 25\ ^\circ C$	1	2		1	2		MHz
*, ▮	DC Transconduct.	$30\ K\Omega \leq R_L \leq 1\ M\Omega$ $T_j = 25\ ^\circ C$	1.1	1.5		1.1	1.5		ms
	Output Low Level			0.2	0.5		0.2	0.5	V
	Output High Level		3.8	5.6		3.8	5.6		V
CMR	Comm. Mode Reject.	V_{CM} = 1.5 to 5.2 V	60	75		60	75		dB
PSR	Supply Voltage Rejection	V_i = 8 to 35 V	50	60		50	60		dB

ELECTRICAL CHARACTERISTICS (continued)

Symbol	Parameter	Test Conditions	SG2525A			SG3525A			Unit
			Min.	Typ.	Max.	Min.	Typ.	Max.	
PWM COMPARATOR									
	Minimum Duty-cycle				0			0	%
•	Maximum Duty-cycle		45	49		45	49		%
•	Input Threshold	Zero Duty-cycle	0.7	0.9		0.7	0.9		V
		Maximum Duty-cycle		3.3	3.6		3.3	3.6	V
*	Input Bias Current			0.05	1		0.05	1	μA
SHUTDOWN SECTION									
	Soft Start Current	V_{SD} = 0 V, V_{SS} = 0 V	25	50	80	25	50	80	μA
	Soft Start Low Level	V_{SD} = 2.5 V		0.4	0.7		0.4	0.7	V
	Shutdown Threshold	To outputs, V_{SS} = 5.1 V T_j = 25 °C	0.6	0.8	1	0.6	0.8	1	V
	Shutdown Input Current	V_{SD} = 2.5 V		0.4	1		0.4	1	mA
*	Shutdown Delay	V_{SD} = 2.5 V T_j = 25 °C		0.2	0.5		0.2	0.5	μs
OUTPUT DRIVERS (each output) (V_C = 20 V)									
	Output Low Level	I_{sink} = 20 mA		0.2	0.4		0.2	0.4	V
		I_{sink} = 100 mA		1	2		1	2	V
	Output High Level	I_{source} = 20 mA	18	19		18	19		V
		I_{source} = 100 mA	17	18		17	18		V
	Under-Voltage Lockout	V_{comp} and V_{ss} = High	6	7	8	6	7	8	V
I_C	Collector Leakage	V_C = 35 V			200			200	μA
t_r*	Rise Time	C_L = 1 nF, T_j = 25 °C		100	600		100	600	ns
t_f*	Fall Time	C_L = 1 nF, T_j = 25 °C		50	300		50	300	ns
TOTAL STANDBY CURRENT									
I_s	Supply Current	V_i = 35 V		14	20		14	20	mA

---

* These parameters, although guaranteed over the recommended operating conditions, are not 100 % tested in production

• Tested at f_{osc} = 40 KHz (R_T = 3.6 KΩ, C_T = 10nF, R_D = 0 Ω). Approximate oscillator frequency is defined by :

$$f = \frac{1}{C_T(0.7\,R_T + 3\,R_D)}$$

■ DC transconductance (g_M) relates to DC open-loop voltage gain (G_v) according to the following equation : $G_v = g_M R_L$ where R_L is the resistance from pin 9 to ground. The minimum g_M specification is used to calculate minimum G_v when the error amplifier output is loaded

TEST CIRCUIT

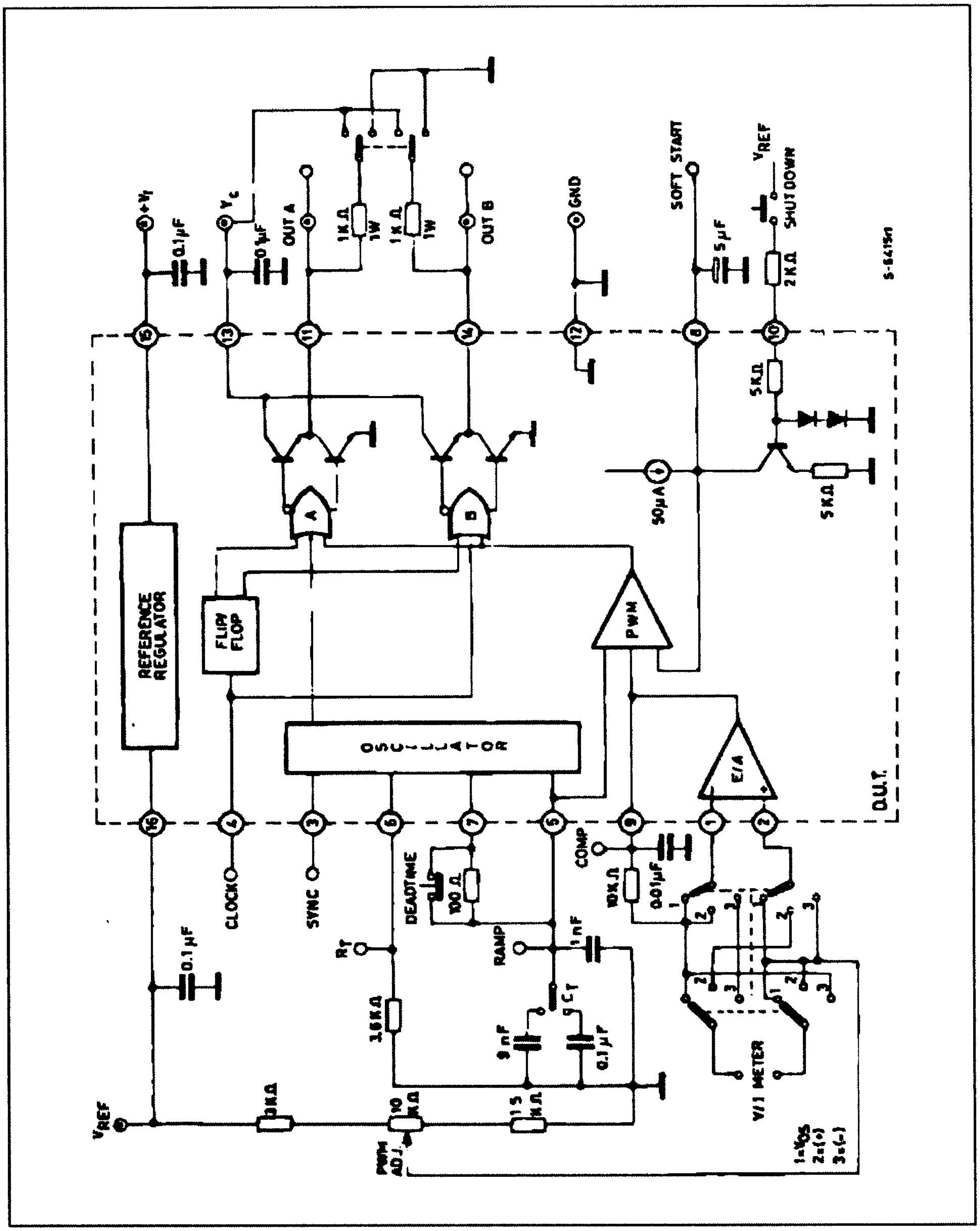

RECOMMENDED OPERATING CONDITIONS (•)

Parameter	Value
Input Voltage (V_i)	8 to 35 V
Collector Supply Voltage (V_C)	4.5 to 35 V
Sink/Source Load Current (steady state)	0 to 100 mA
Sink/Source Load Current (peak)	0 to 400 mA
Reference Load Current	0 to 20 mA
Oscillator Frequency Range	100 Hz to 400 KHz
Oscillator Timing Resistor	2 KΩ to 150 KΩ
Oscillator Timing Capacitor	0.001 μF to 0.1 μF
Dead Time Resistor Range	0 to 500 Ω

(•) Range over which the device is functional and parameter limits are guaranteed.

Figure 1 : Oscillator Charge Time vs. R_T and C_T.

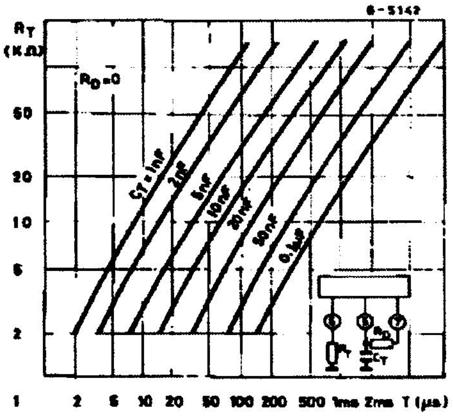

Figure 2 : Oscillator Discharge Time vs. R_D and C_T.

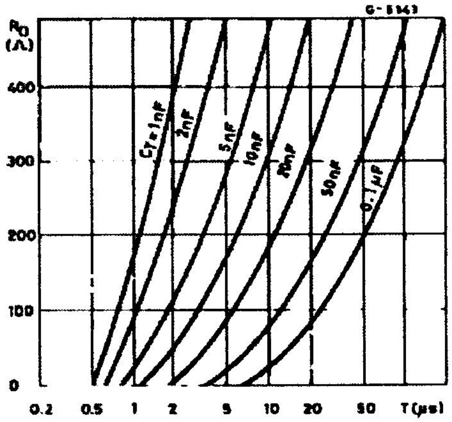

Figure 3 : Output Saturation Characteristics.

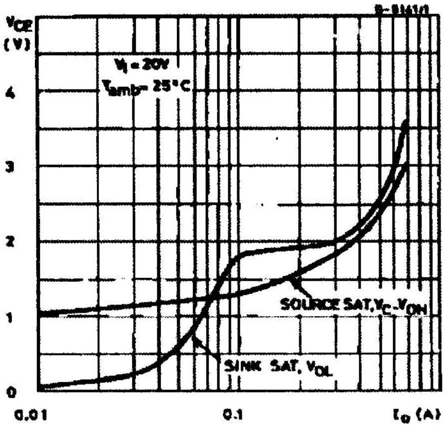

Figure 4 : Error Amplifier Voltage Gain and Phase vs. Frequency.

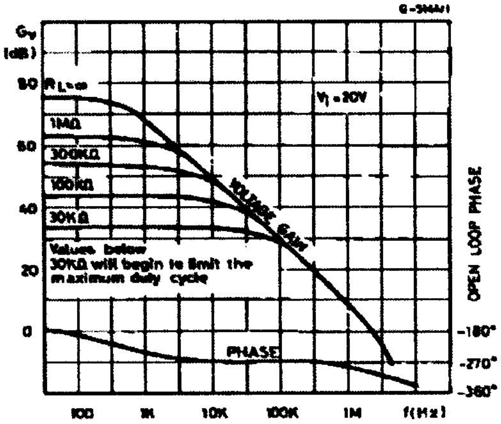

Figure 5 : Error Amplifier.

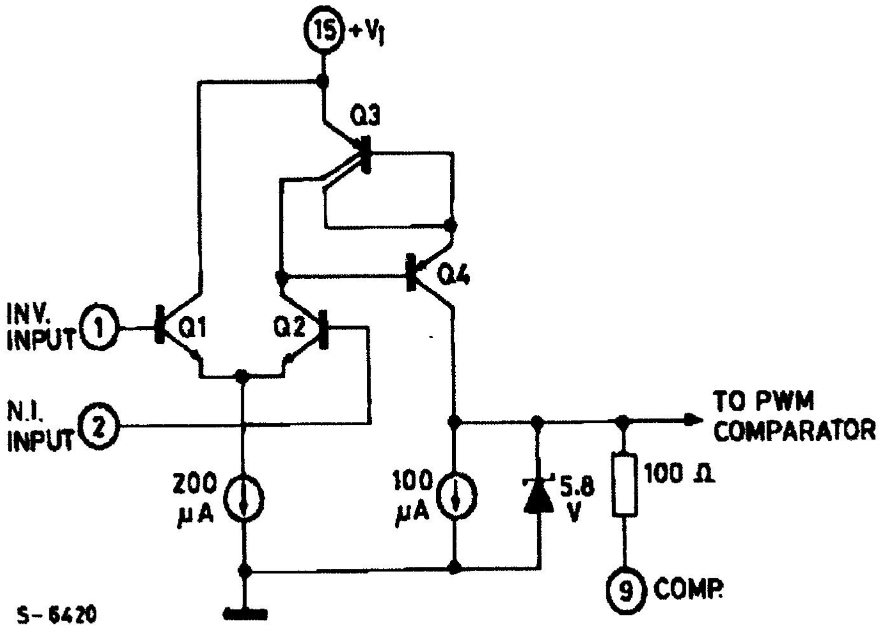

PRINCIPLES OF OPERATION

SHUTDOWN OPTIONS (see Block Diagram)

Since both the compensation and soft-start terminals (Pins 9 and 8) have current source pull-ups, either can readily accept a pull-down signal which only has to sink a maximum of 100 μA to turn off the outputs. This is subject to the added requirement of discharging whatever external capacitance may be attached to these pins.

An alternate approach is the use of the shutdown circuitry of Pin 10 which has been improved to enhance the available shutdown options. Activating this circuit by applying a positive signal on Pin 10 performs two functions : the PWM latch is immediately set providing the fastest turn-off signal to the outputs ; and a 150 μA current sink begins to discharge the external soft-start capacitor. If the shutdown command is short, the PWM signal is terminated without significant discharge of the soft-start capacitor, thus, allowing, for example, a convenient implementation of pulse-by-pulse current limiting. Holding Pin 10 high for a longer duration, however, will ultimately discharge this external capacitor, recycling slow turn-on upon release.

Pin 10 should not be left floating as noise pickup could conceivably interrupt normal operation.

APPENDIX C

IRF3205 n-channel enhancement MOSFET Datasheet

International
IOR Rectifier

PD-91279E

IRF3205

HEXFET® Power MOSFET

- Advanced Process Technology
- Ultra Low On-Resistance
- Dynamic dv/dt Rating
- 175°C Operating Temperature
- Fast Switching
- Fully Avalanche Rated

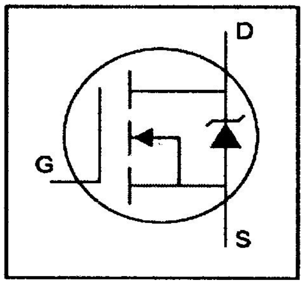

$V_{DSS} = 55V$

$R_{DS(on)} = 8.0m\Omega$

$I_D = 110A$⑤

Description

Advanced HEXFET® Power MOSFETs from International Rectifier utilize advanced processing techniques to achieve extremely low on-resistance per silicon area. This benefit, combined with the fast switching speed and ruggedized device design that HEXFET power MOSFETs are well known for, provides the designer with an extremely efficient and reliable device for use in a wide variety of applications.

The TO-220 package is universally preferred for all commercial-industrial applications at power dissipation levels to approximately 50 watts. The low thermal resistance and low package cost of the TO-220 contribute to its wide acceptance throughout the industry.

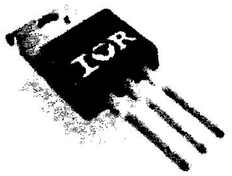

TO-220AB

Absolute Maximum Ratings

	Parameter	Max.	Units
I_D @ T_C = 25°C	Continuous Drain Current, V_{GS} @ 10V	110 ⑤	A
I_D @ T_C = 100°C	Continuous Drain Current, V_{GS} @ 10V	80	
I_{DM}	Pulsed Drain Current ①	390	
P_D @T_C = 25°C	Power Dissipation	200	W
	Linear Derating Factor	1.3	W/°C
V_{GS}	Gate-to-Source Voltage	± 20	V
I_{AR}	Avalanche Current①	62	A
E_{AR}	Repetitive Avalanche Energy①	20	mJ
dv/dt	Peak Diode Recovery dv/dt ③	5.0	V/ns
T_J T_{STG}	Operating Junction and Storage Temperature Range	-55 to + 175	°C
	Soldering Temperature, for 10 seconds	300 (1.6mm from case)	
	Mounting torque, 6-32 or M3 srew	10 lbf•in (1.1N•m)	

Thermal Resistance

	Parameter	Typ.	Max.	Units
$R_{\theta JC}$	Junction-to-Case	——	0.75	°C/W
$R_{\theta CS}$	Case-to-Sink, Flat, Greased Surface	0.50	——	
$R_{\theta JA}$	Junction-to-Ambient	——	62	

Electrical Characteristics @ T_J = 25°C (unless otherwise specified)

	Parameter	Min.	Typ.	Max.	Units	Conditions
$V_{(BR)DSS}$	Drain-to-Source Breakdown Voltage	55	—	—	V	V_{GS} = 0V, I_D = 250μA
$\Delta V_{(BR)DSS}/\Delta T_J$	Breakdown Voltage Temp. Coefficient	—	0.057	—	V/°C	Reference to 25°C, I_D = 1mA
$R_{DS(on)}$	Static Drain-to-Source On-Resistance	—	—	8.0	mΩ	V_{GS} = 10V, I_D = 62A ④
$V_{GS(th)}$	Gate Threshold Voltage	2.0	—	4.0	V	$V_{DS} = V_{GS}$, I_D = 250μA
g_{fs}	Forward Transconductance	44	—	—	S	V_{DS} = 25V, I_D = 62A④
I_{DSS}	Drain-to-Source Leakage Current	—	—	25	μA	V_{DS} = 55V, V_{GS} = 0V
		—	—	250		V_{DS} = 44V, V_{GS} = 0V, T_J = 150°C
I_{GSS}	Gate-to-Source Forward Leakage	—	—	100	nA	V_{GS} = 20V
	Gate-to-Source Reverse Leakage	—	—	-100		V_{GS} = -20V
Q_g	Total Gate Charge	—	—	146	nC	I_D = 62A
Q_{gs}	Gate-to-Source Charge	—	—	35		V_{DS} = 44V
Q_{gd}	Gate-to-Drain ("Miller") Charge	—	—	54		V_{GS} = 10V, See Fig. 6 and 13
$t_{d(on)}$	Turn-On Delay Time	—	14	—	ns	V_{DD} = 28V
t_r	Rise Time	—	101	—		I_D = 62A
$t_{d(off)}$	Turn-Off Delay Time	—	50	—		R_G = 4.5Ω
t_f	Fall Time	—	65	—		V_{GS} = 10V, See Fig. 10 ④
L_D	Internal Drain Inductance	—	4.5	—	nH	Between lead, 6mm (0.25in.) from package and center of die contact 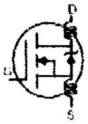
L_S	Internal Source Inductance	—	7.5	—		
C_{iss}	Input Capacitance	—	3247	—	pF	V_{GS} = 0V
C_{oss}	Output Capacitance	—	781	—		V_{DS} = 25V
C_{rss}	Reverse Transfer Capacitance	—	211	—		ƒ = 1.0MHz, See Fig. 5
E_{AS}	Single Pulse Avalanche Energy②	—	1050⑥	264⑦	mJ	I_{AS} = 62A, L = 138μH

Source-Drain Ratings and Characteristics

	Parameter	Min.	Typ.	Max.	Units	Conditions
I_S	Continuous Source Current (Body Diode)	—	—	110	A	MOSFET symbol showing the integral reverse p-n junction diode. 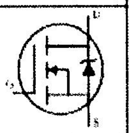
I_{SM}	Pulsed Source Current (Body Diode)①	—	—	390		
V_{SD}	Diode Forward Voltage	—	—	1.3	V	T_J = 25°C, I_S = 62A, V_{GS} = 0V ④
t_{rr}	Reverse Recovery Time	—	69	104	ns	T_J = 25°C, I_F = 62A
Q_{rr}	Reverse Recovery Charge	—	143	215	nC	di/dt = 100A/μs ④
t_{on}	Forward Turn-On Time	Intrinsic turn-on time is negligible (turn-on is dominated by L_S+L_D)				

Notes:

① Repetitive rating; pulse width limited by max. junction temperature. (See fig. 11)

② Starting T_J = 25°C, L = 138μH R_G = 25Ω, I_{AS} = 62A. (See Figure 12)

③ $I_{SD} \le 62A$, di/dt ≤ 207A/μs, $V_{DD} \le V_{(BR)DSS}$, $T_J \le 175°C$

④ Pulse width ≤ 400μs; duty cycle ≤ 2%.

⑤ Calculated continuous current based on maximum allowable junction temperature. Package limitation current is 75A.

⑥ This is a typical value at device destruction and represents operation outside rated limits.

⑦ This is a calculated value limited to T_J = 175°C.

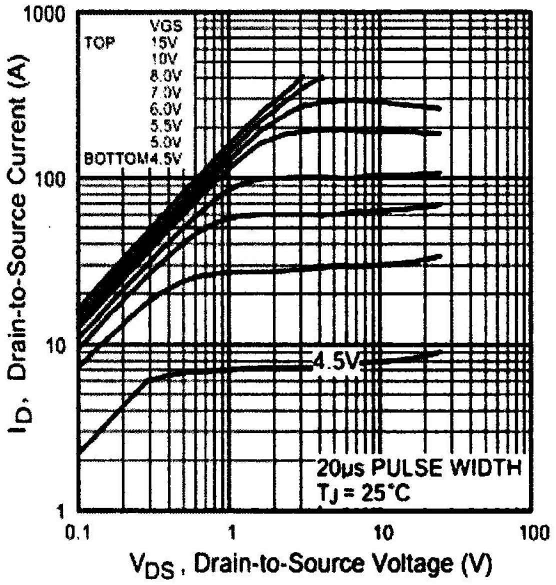

Fig 1. Typical Output Characteristics

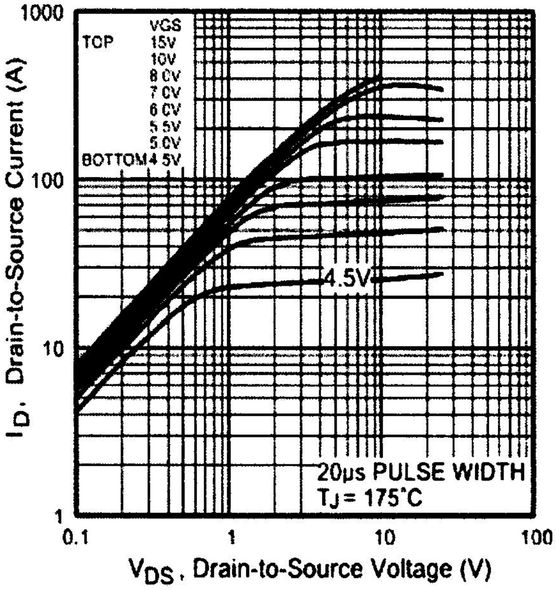

Fig 2. Typical Output Characteristics

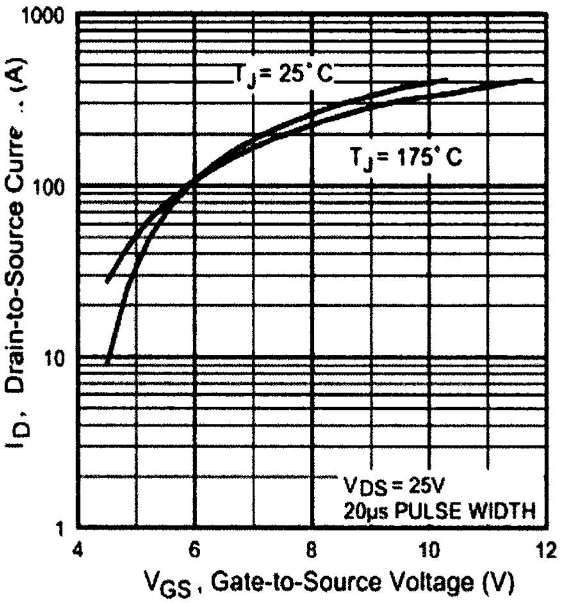

Fig 3. Typical Transfer Characteristics

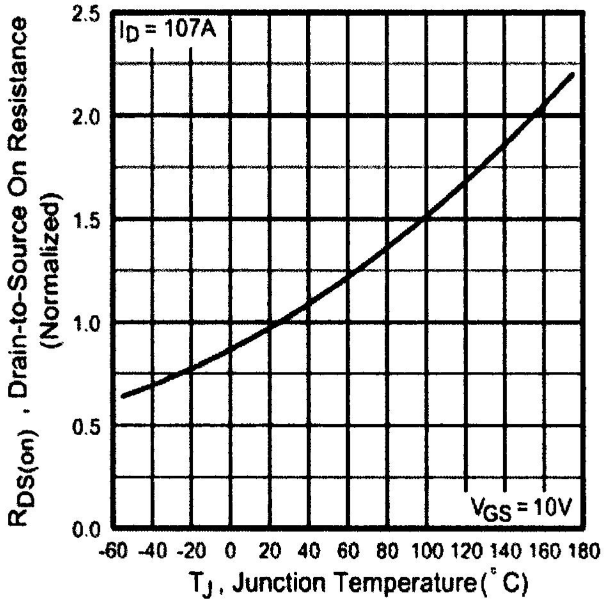

Fig 4. Normalized On-Resistance Vs. Temperature

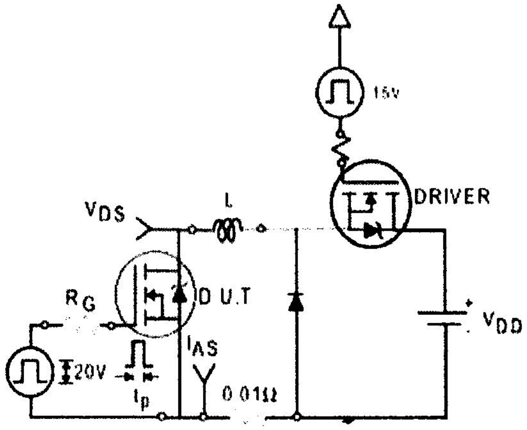

Fig 12a. Unclamped Inductive Test Circuit

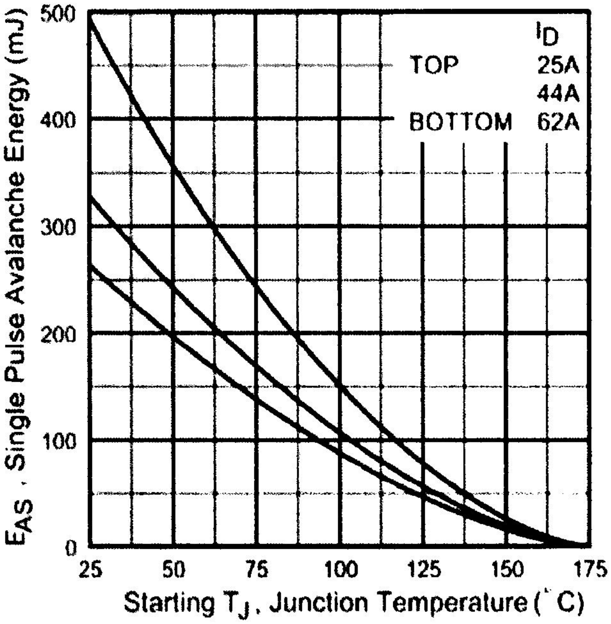

Fig 12c. Maximum Avalanche Energy Vs. Drain Current

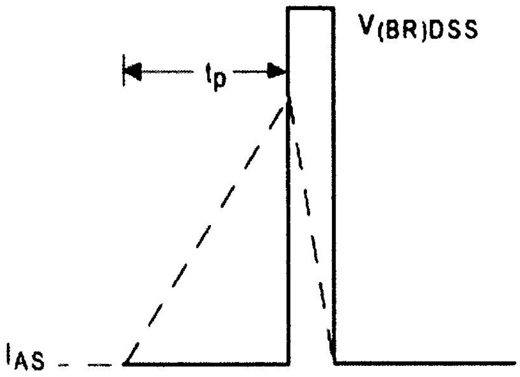

Fig 12b. Unclamped Inductive Waveforms

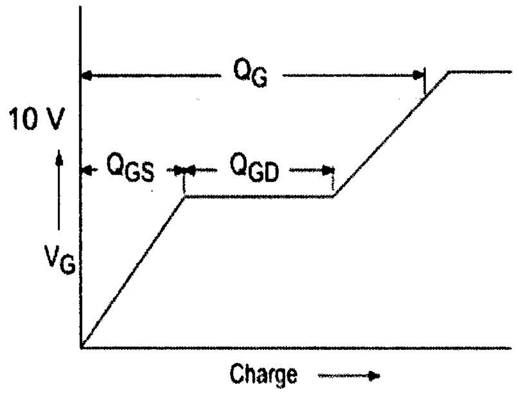

Fig 13a. Basic Gate Charge Waveform

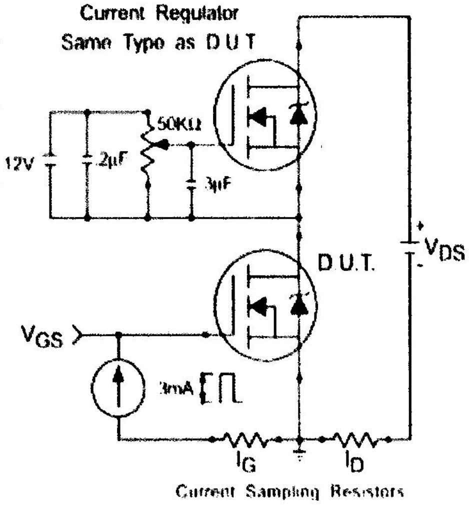

Fig 13b. Gate Charge Test Circuit